Form Approved
OMB No. 0704-0188

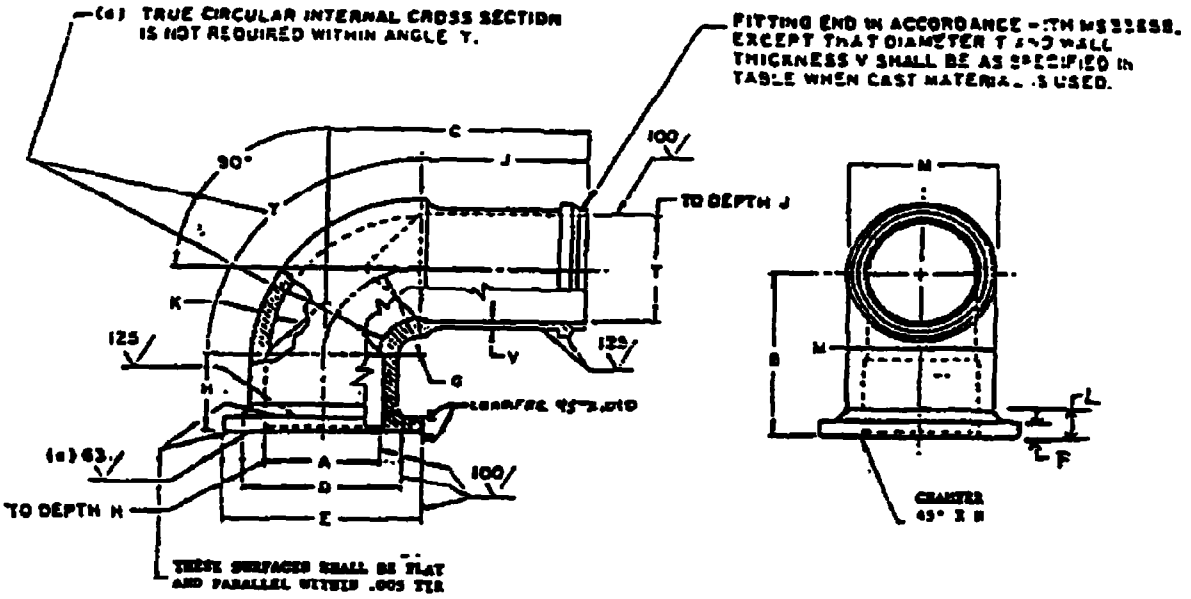


(a) INTERNAL FLOW PASSAGE AROUND BEND SHALL BE SMOOTH AND FREE FROM PROJECTIONS.
(b) DIAMETER A, D, AND E SHALL BE CONCENTRIC WITH EACH OTHER WITHIN .010 TIR.
(c) ANNULAR TOOL MARKS UP TO 63 Ra WILL BE ALLOWED.

REQUIREMENTS:
DIMENSIONS IN INCHES.
UNLESS OTHERWISE SPECIFIED, TOLERANCES: DECIMALS ±.005, ANGLES ±3°.
BREAK ALL SHARP EDGES AND REMOVE ALL HANGING BURRS AND SLIVERS.
UNLESS OTHERWISE SPECIFIED, SURFACE ROUGHNESS SHALL NOT EXCEED 100 Ra (SEE ANSI/ASME B46.1)
MATERIAL: ALUMINUM ALLOY FORGING, SPECIFICATION QQ-A-367, 2014-T6.
OPTIONAL MATERIAL: PERMANENT MOLD ALUMINUM ALLOY CASTING, SPECIFICATION QQ-A-596.
FINISH: ANODIZED PER MIL-A-8625, DYE LIGHT BLUE.
FITTINGS SHALL BE PERMANENTLY MARKED WITH MS PART NUMBER ON AN UNFINISHED SURFACE.
POROSITY TEST: FINISHED CASTINGS SHALL NOT LEAK WHEN SUBJECTED TO 100 PSI AIR PRESSURE AND SUBMERGED IN WATER FOR 3 MINUTES MINIMUM.

NOTES:
THIS STANDARD TAKES PRECEDENCE OVER DOCUMENTS REFERENCED HEREIN.
FOR NOMINAL USE ON FUEL AND OIL SYSTEMS.
MAX OPERATING TEMPERATURE 275°F. FOR HOSE SIZES THRU 1 INCH: MAX PRESSURE 1500 PSI. FOR TUBE SIZES EXCEEDING 1 INCH: MAX PRESSURE 500 PSI.
REDUCTION BY FORGING DRAFT ANGLE OF 7° MAX IS PERMISSIBLE.
REVISION LETTERS ARE NOT USED TO DENOTE CHANGES DUE TO THE EXTENSIVENESS OF THE CHANGES.

INCH-POUND

| | | |
|---|---|---|
| PREPARING ACTIVITY: AIR FORCE - 82<br>CUSTODIANS: ARMY - NAVY - AIR FORCE - 99<br>REVIEW: DLA - CS<br>USER:<br>PROJECT NUMBER: 4730-1130 | MILITARY SPECIFICATION SHEET<br>TITLE: ELBOW, HOSE, FLANGED SWIVEL, 90° | SPECIFICATION SHEET NUMBER:<br>MS20759, REV B 14 Apr 94<br>SUPERSEDING<br>MS20759, REV A 2 SEP 82<br>AMSC: N/A FSC 4730 |

DISTRIBUTION STATEMENT A. APPROVED FOR PUBLIC RELEASE: DISTRIBUTION IS UNLIMITED.



DD Form 672, MAY 88 Previous editions are obsolete

THIS SPECIFICATION IS APPROVED FOR USE BY ALL DEPARTMENTS AND AGENCIES OF THE DEPARTMENT OF DEFENSE.

THE REQUIREMENTS FOR ACQUIRING THE PRODUCT(S) DESCRIBED HEREIN SHALL CONSIST OF THIS SPECIFICATION SHEET AND THE ISSUE OF THE FOLLOWING SPECIFICATION LISTED IN THAT ISSUE OF THE DODISS SPECIFIED IN THE SOLICITATION: NONE.

Form Approved
OMB No. 0704-0188

| DASH NO. | HOSE ID | A ±.003 DIA | B +.047 -.000 | C +.047 -.000 | D +.00- .010 | E +.000 -.005 | F +.000 -.005 | G RAD | H +.047 -.000 |
|---|---|---|---|---|---|---|---|---|---|
| -D12 | .750 | .609 | 1.312 | 2.125 | .965 | 1.250 | .156 | .594 | .719 |
| -D12-16 | | | | | | 1.500 | | | |
| -D16 | 1.000 | .844 | 1.438 | 2.250 | 1.215 | | | .719 | |
| -D20 | 1.250 | 1.078 | 1.688 | 2.438 | 1.465 | 1.844 | | .875 | .812 |
| -D20-24 | | | | | | 2.125 | .188 | | |
| -D24 | 1.500 | 1.312 | 1.812 | 2.562 | 1.765 | | | 1.000 | |
| -D32 | 2.000 | 1.781 | 2.188 | 2.875 | 2.375 | 2.750 | | 1.312 | .875 |
| -D40 | 2.500 | 2.281 | 2.438 | 3.125 | 2.875 | 3.281 | | 1.562 | |
| -D48 | 3.000 | 2.781 | 2.688 | 3.375 | 3.375 | 3.781 | | 1.812 | |

| DASH NO. | J +.047 -.000 | K MIN | K MAX | L ±.030 | M ±.010 DIA | N DIA | T MIN DIA | V MIN LBS | WEIGHT MAX LBS |
|---|---|---|---|---|---|---|---|---|---|
| -D12 | 1.531 | .125 | .164 | .250 | .875 | .669 | .609 | .065 | .10 |
| -D12-16 | | | | | | | | | .12 |
| -D16 | | .141 | .176 | | 1.125 | .904 | .839 | | .15 |
| -D20 | 1.562 | .156 | .221 | | 1.375 | 1.138 | 1.059 | .080 | .26 |
| -D20-24 | | | | | | | | | .20 |
| -D24 | | .172 | .234 | .375 | 1.625 | 1.372 | 1.309 | | .25 |
| -D32 | | .203 | .322 | | 2.250 | 1.841 | 1.753 | .100 | .73 |
| -D40 | | .234 | .333 | | 2.875 | 2.341 | 2.203 | | 1.04 |
| -D48 | | .250 | .344 | | 3.359 | 2.841 | 2.753 | | 1.40 |

INCH-POUND

THE REQUIREMENTS FOR ACQUIRING THE PRODUCT(S) DESCRIBED HEREIN SHALL CONSIST OF THIS SPECIFICATION SHEET AND THE ISSUE OF THE FOLLOWING SPECIFICATION LISTED IN THAT ISSUE OF THE DODISS SPECIFIED IN THE SOLICITATION: NONE.

THIS SPECIFICATION IS APPROVED FOR USE BY ALL DEPARTMENTS AND AGENCIES OF THE DEPARTMENT OF DEFENSE.

PREPARING ACTIVITY: AIR FORCE - 82
CUSTODIANS: ARMY - NAVY - AIR FORCE - 99
REVIEW: DLA - CS
USER:
PROJECT NUMBER: 4730-1124

MILITARY SPECIFICATION SHEET
TITLE: ELBOW, HOSE, FLANGED SWIVEL, 90°

SPECIFICATION SHEET NUMBER: MS20759, REV B 14 Apr 98
SUPERSEDING: MS20759, REV A 2 SEP 82
AMSC: N/A FSC: 4730

DISTRIBUTION STATEMENT A. APPROVED FOR PUBLIC RELEASE; DISTRIBUTION IS UNLIMITED.



DD Form 673, MAY 89 Previous editions are obsolete