FED. SUP CLASS
4730

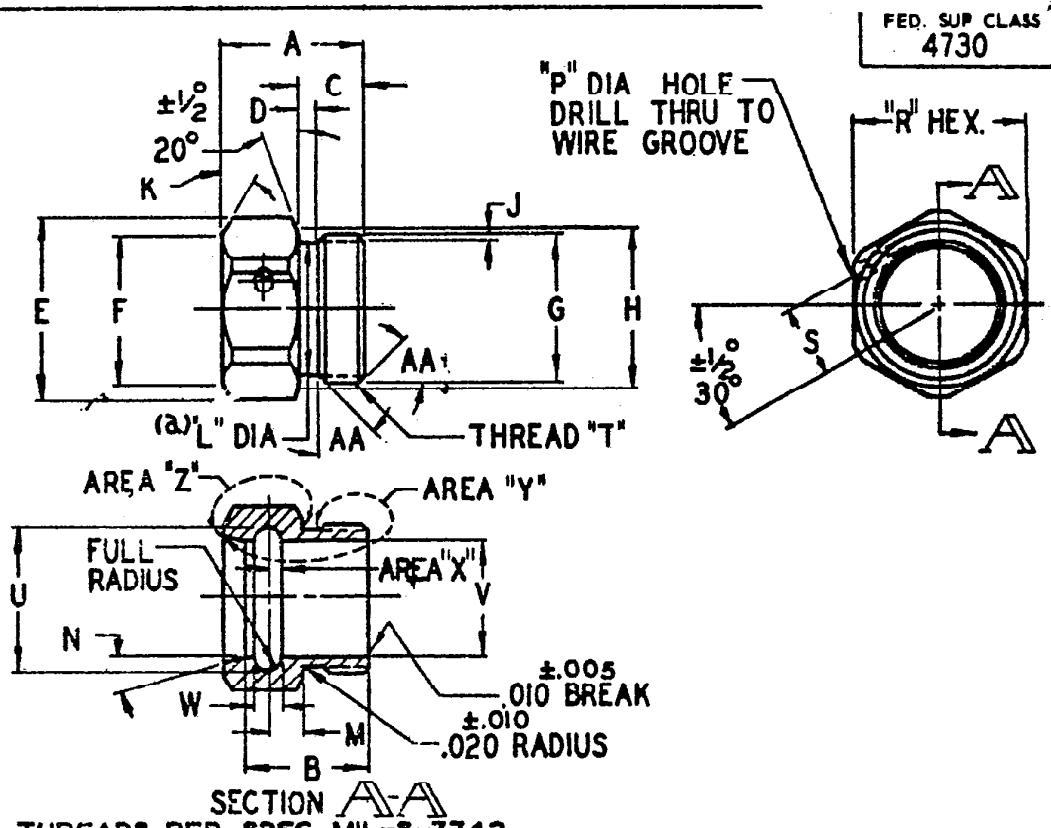

THREADS PER SPEC MIL-S-7742.

MATERIAL: CORROSION RESISTING STEEL, CLASS 304, CONDITION "A" SPECIFICATION QQ-S-763.
ALUMINUM ALLOY, 2024, SPECIFICATION QQ-A-225, TEMPER PER MIL-F-5509.

FINISH: CORROSION RESISTING STEEL, PASSIVATE PER PROCUREMENT SPECIFICATION.
ALUMINUM ALLOY, ANODIZE PER SPECIFICATION MIL-A-8625, TYPE II. FOR UNION USED ON FLARED AND FLANGED NIPPLE ASSYS DYE BLUE AND ON FLARELESS, YELLOW.

STEEL ONLY: DRY-FILM LUB AREA "Y" IN ACCORDANCE WITH MIL-L-8937. NO DRY-FILM ALLOWED IN AREA "Z". DRY-FILM ALLOWED IN AREA "X", BUT NOT REQD.

(a) THREAD GAGE MUST ENTER THREAD RELIEF. THREAD MARKS ON THREAD RELIEF SHALL NOT BE CAUSE FOR REJECTION.

DIMENSIONS IN INCHES. UNLESS OTHERWISE SPECIFIED: RADIUS OR BREAK ALL CORNERS .005+.005/-.000. REMOVE ALL BURRS AND SLIVERS. SURFACE ROUGHNESS PER ASA B46.1-1962 NOT TO EXCEED 125 RHR. ALL DIAMETERS MUST BE CONCENTRIC WITHIN .005 TIR.

THIS STANDARD TAKES PRECEDENCE OVER DOCUMENTS REFERENCED HEREIN.

THIS IS A DESIGN STANDARD FOR MANUFACTURING PURPOSES. THE ITEM IS ONLY PROCURED AS AN INTEGRAL PART OF ADAPTER ASSY. NEXT ASSEMBLIES MS27082 THRU MS27088.

(B) ENTIRE STANDARD REVISED. (B) FOR CHANGES SEE SHEETS 1 AND 2.

APPROVED 1 SEP 61 REVISED (A) 2 JUL 63 (B) 2 MAY 66

P.A. AIR FORCE-11	TITLE	MILITARY STANDARD
Other Cust ARMY - MO NAVY - WP	UNION, NIPPLE	MS27071
Procurement Specification	SUPERSEDES	SHEET 1 OF 2

DD FORM 1 SEP 61 672 (Coordinated) PREV. 305 IC

(B) NOTE: The Government has a royalty free license under the following listed patents for the benefit of manufacturers of the item either for the Government or for use in equipment to be delivered to the Government. (U. S. Patent Nos. 2,833,567; 3,044,163; 3,055,682)

User Activities: Army - MI Navy - SH

Air Force - 11-69

This is ... endard is approved by the Department of Defense and is mandatory on all activities, selection for all new engineering and design applications and for repetitive use shall be made from this document.

This military standard is approved by the Department of Defense and is mandatory on all activities. Selection for all new engineering and design applications and for repetitive use shall be made from this document.

Review Activities:
Army - MO
Navy - WP
Air Force - 11, 69

User Activities:
Army - MI
Navy - SH

AIR FORCE-11
Other Cust
ARMY - MO
NAVY - WP
Procurement Specification
SUPERSEDES

UNION, NIPPLE

MILITARY STANDARD

MS27071

SHEET 2 OF

FED SUP CLASS 4730

(B) ENTIRE STANDARD REVISED.

DASH NUMBER STEEL	DASH NUMBER ALUM	A ±.010	B		C ±.005 STEEL	C ±.005 ALUM	D ±.005 STEEL	D ±.005 ALUM	E ±.005	F ±.02	G		H ±.02	J		K ±½°
-4C	—	.480	—	—	.250	—	.075	—	.634	.50	.500	+.000/-.006	.53	.031	±.005	30°
-5C	—	.495	—	—	.245	—	.085	—	.707	.56	.562	+.000 -.007	.59			
-6C	—	.515	—	—		—	.050	—	.779	.62	.625		.66	.015	MAX	
-8C	(b)—	.577	—	—	.265	—	.085	—	.995	.81	.750		.84	.031	±.005	
-10C	-10D	.608	—	—	.295	.295	.100	.100	1.140	.94	.875	+.000 -.008	.97	.035		
-12C	-12D	.715	.595	±.010	.355	.338		.083	1.284	1.06	1.000		1.09			20°
-16C	-16D	.791	.640		.385	.365	.110	.090	1.717	1.44	1.375	+.000 -.009	1.47	.038		
-20C	-20D	.835	.665		.395	.395	.085	.085	2.078	1.75	1.688		1.78			
-24C	-24D	.995	.765	±.005	.495	.495	.100	.100	2.439	2.06	1.938	+.000/-.010	2.09	.043		
(c)-3C	—	.448	.395	±.005	.230	—	.075	—	.490	.38	.375	+.000/-.006	.41	.031		30°

L +.005 -.000	M ±.003	N ±½°	P ±.005	R ±.02	S ±.005	THREAD T	PITCH DIAMETER	U +.005 -.000	V +.005 -.000	W		AA ±5°
.438	.086	—	.078	.56	.185	1/2-28 UNEF-3A	.4768/.4740	.443	.379	.074	+.004 -.000	45°
.491	.109	—	.086	.62	.203	9/16-24 NEF-3A	.5354/.5325	.487	.422	.084		
.553		—		.69	.240	5/8-24 NEF-3A	.5979/.5949	.562	.497			30°
.678	.110	—	.101	.88	.301	3/4-24 NS-3A	.7229/.7198	.698	.622	.098		45°
.790	.116	—		1.00	.346	7/8-20 UNEF-3A	.8425/.8392	.788	.712			
.915	.135	15°	.131	1.12	.406	1-20 UNEF-3A	.9675/.9641	.938	.832	.128	+.005 -.000	
1.282	.150	10°		1.50	.571	1 3/8-18 NEF-3A	1.3389/1.3353	1.268	1.156			
1.594	.160	15°		1.81	.697	1 11/16-18 NEF-3A	1.6514/1.6476	1.519	1.411			
1.833				2.12	.814	1 15/16-16 N-3A	1.8969/1.8929	1.754	1.641			30°
.320	.086		.078	.44	.126	3/8-32 NEF-3A	.3547/.3522	.326	.262	.074	+.004 -.000	45°

(b) MS27071-8D CANCELLED AFTER 2 MAY 1966. USE MS27071-8C.
(c) MS27071-3C INACTIVE FOR DESIGN AFTER 2 MAY 1966. USE ONLY IN ASSEMBLIES FOR REPLACEMENT OF IDENTICAL ITEMS IN EXISTING MILITARY EQUIPMENT.

APPROVED 1 SEP 61 REVISED (B) FOR CHANGES SEE SHEETS 1 AND 2.

(B) NOTE: The Government has a royalty free license under the following listed patents for the benefit of manufacturers of the item either for the Government or for use in equipment to be delivered to the Government. (U. S. Patent Nos. 2,833,567; 3,044,163; 3,055,682)