FED. SUP CLASS 5120

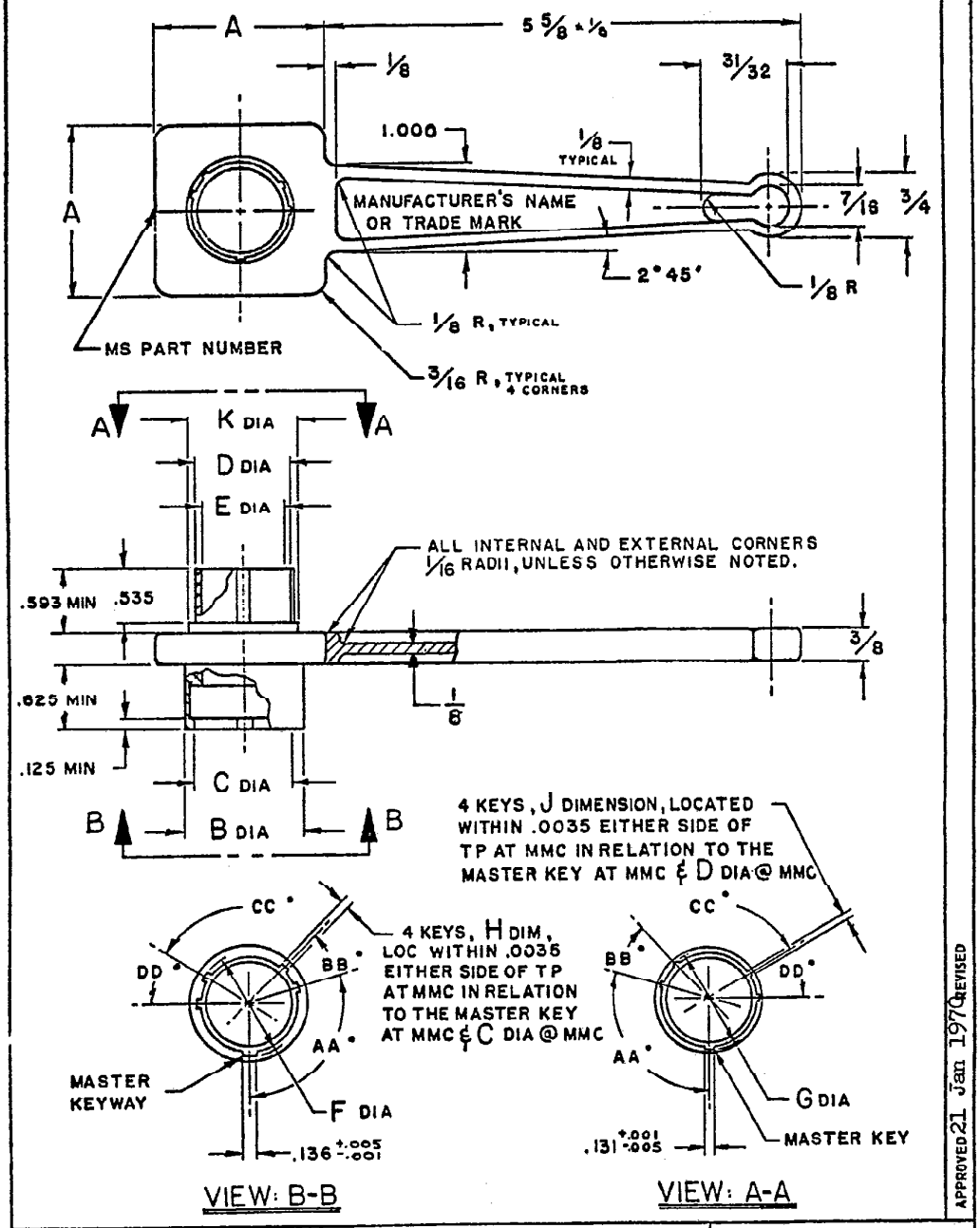

APPROVED 21 Jan 1970 REVISED

P.A. NAVY—AS Other Cust	TITLE TOOL, CONNECTOR ASSEMBLY, FOR MIL-C-81511 CONNECTORS	MILITARY STANDARD MS 3482 (NAVY)
PROCUREMENT SPECIFICATION NONE	SUPERSEDES:	SHEET 1 OF 2

DD FORM 1 SEP 67 672-1 (Limited coordination)

This military standard is approved by the Department of the Navy and is mandatory for use by the Department of the Navy. All other military activities are required to employ this standard where suitable.

This military standard is approved by the Department of the Navy and is mandatory for use by that Department. All other military activities are required to employ this standard where suitable.

DASH NUMBER	CONNECTOR SHELL SIZE	A ±.060	B DIA ±.003	C DIA ±.003	D DIA +.001 −.008	E DIA APPROX	F DIA MIN	G DIA MAX	H +.006 −.001	J +.001 −.006	K DIA APPROX
−08	8	1.250	.550	.389	.381	.319	.450	.440	.071	.056	.550
−10	10		.675	.514	.506	.444	.575	.565			.675
−14	14	2.000	.925	.764	.756	.694	.825	.815			.925
−16	16		1.051	.890	.882	.820	.951	.941	.084	.069	1.051
−18	18		1.175	1.014	1.006	.944	1.075	1.065			1.175

SHELL SIZE 8

POLARIZATION POSITION	AA°
1	128°
2	190°
3	205°
4	220°
5	235°
6	250°

SHELL SIZE 10 AND 14

POLARIZATON POSITION	AA°	BB°	CC°	DD°
1	105°	140°	215°	265°
2	102°	132°	248°	320°
3	80°	118°	230°	312°
4	35°	140°	205°	275°
5	64°	155°	235°	304°
6	35°	115°	220°	270°

SHELL SIZE 16 AND 18

POLARIZATION POSITION	AA°	BB°	CC°	DD°
1	105°	140°	215°	265°
2	18°	149°	192°	259°
3	92°	152°	222°	342°
4	84°	152°	204°	334°
5	24°	135°	199°	240°
6	98°	152°	268°	338°

REQUIREMENTS:

1. TOOLS ARE FOR USE WITH CONNECTORS CONFORMING TO MIL-C-81511.
2. PART NUMBER SHALL INCLUDE: MS PART NUMBER AND DASH NUMBER(S) SHOWN IN THE EXAMPLE BELOW,

MS3482—18—6

MS NUMBER — MS3482; DASH NUMBER — 18; POLARIZATION POSITION — 6

NOTES:

1. MATERIAL: a. SHELL; ALUMINUM ALLOY PER QQ-A-225/6,/8 OR /10.
   b. HANDLE; DIE CAST ALUMINUM ALLOY PER QQ-A-591.
2. FINISH: NICKEL PLATE PER QQ-N-290.
3. REMOVE ALL BURRS AND SHARP EDGES.
4. ALL DIMESIONS ARE INCHES. UNLESS OTHERWISE SPECIFIED, TOLERANCES: FRACTIONS $\pm\frac{1}{16}$, ANGLES: TP DECIMALS ±.016

FOR DESIGN FEATURE PURPOSES, THIS STANDARD TAKES PRECEDENCE OVER PROCUREMENT DOCUMENTS REFERENCED HEREIN.

REFERENCED DOCUMENTS SHALL BE OF THE ISSUE IN EFFECT ON DATE OF INVITATIONS FOR BID.

APPROVED 21 Jan. 197[illegible] REVISED

FED. SUP CLASS 5120

P.A. NAVY-AS
Other Cust

PROCUREMENT SPECIFICATION NONE

TITLE TOOL, CONNECTOR ASSEMBLY; FOR MIL-C-81511 CONNECTORS

SUPERSEDES:

MILITARY STANDARD

MS3482(NAVY)

SHEET 2

DD FORM 1 NOV 67 672-1 (Limited coordination)

PLATE NO. 17709