FED. SUP CLASS
1610

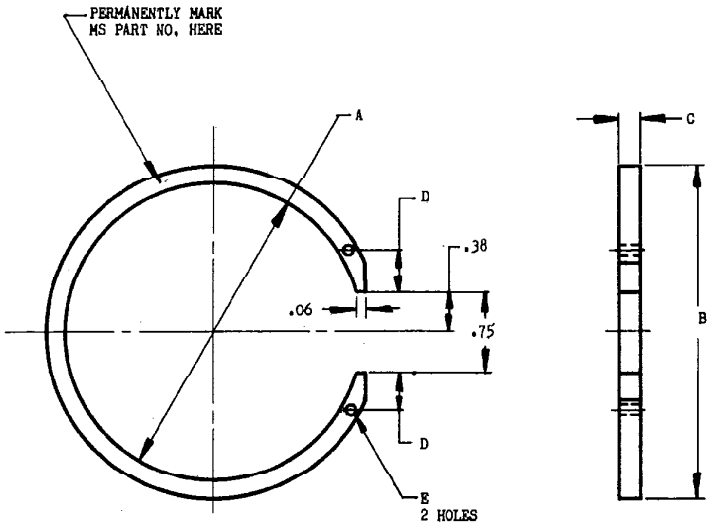

DASH NO.	A DIA	B DIA	C ±.005	D	E DIA	SHAFT NO.
-7-1/2	2.25	2.56	.125	-	-	7-1/2
-10	2.62	2.94	.182	.31	.06	10
-20	2.94	3.25				20
-30	3.09	3.41				30
-40	3.75	4.12		.44		40
(a) -50	4.38	4.75		.69	.13	50(a)
-60▲	5.25	5.75		.75		60▲
-70	6.00	6.50		.88		70

(a) -50A, -51, AND -51A SHAFT SIZES USE -50 SNAP RING.

(A) MATERIAL: STEEL, MIL-S-5000 OR MIL-S-8503 OPTIONAL MATERIAL: AMS6415, AMS6448 OR AMS6323.
FINISH: CADMIUM PLATE, QQ-P-416, TYPE II CLASS 2.
(A) ROUGHNESS HEIGHT RATING 32, IN ACCORDANCE WITH ANSI B46.1 1978.
HEAT TREATMENT: ROCKWELL 638-42, MIL-H-6875.
REMOVE ALL BURRS AND SHARP EDGES .020.
DIMENSIONS IN INCHES. UNLESS OTHERWISE SPECIFIED, TOLERANCES: DECIMALS ±.01.
IDENTIFICATION MARKING TO BE IN ACCORDANCE WITH MIL-STD-130.

ITEM PARTS COVERED BY THIS STANDARD ARE FUNCTIONALLY AND PHYSICALLY INTERCHANGEABLE WITH THOSE PARTS HAVING IDENTICAL DASH NUMBERS OF SUPERSEDED STANDARD AN5009.

FOR DESIGN FEATURE PURPOSES, THIS STANDARD TAKES PRECEDENCE OVER PROCUREMENT DOCUMENTS REFERENCED HEREIN. REFERENCED DOCUMENTS SHALL BE OF THE ISSUE IN EFFECT ON DATE OF INVITATIONS FOR BID.

APPROVED 5 Sep 61 REVISED (A) 29 Apr 81

P.A. Air Force - 11 Other Cust Army - AV Navy - AS	TITLE RING, RETAINING - PROPELLER HUB, SNAP	MILITARY STANDARD MS5009
PROCUREMENT SPECIFICATION NONE	SUPERSEDES: AN5009	SHEET 1 OF 1

DD FORM 1 SEP 67 672-1 (Coordinated) PREVIOUS EDITIONS OF THIS FORM ARE OBSOLETE.

NOTICE—When Government drawings, specifications, or other data are used for any purpose other than in connection with a definitely related Government procurement operation, the United States Government thereby incurs no responsibility, nor any obligation whatsoever; and the fact that the Government may have formulated, furnished, or in any way supplied the said drawings, specifications, or other data is not to be regarded by implication or otherwise or in any manner licensing the holder or any other person or corporation, or conveying any rights or permission to manufacture, use, or sell any patented invention that may in any way be related thereto.

This military standard is approved by the Department of Defense and is mandatory on all activities. Selection for all reverse engineering and design applications and for repetitive use shall be made from this document.