FED SUP CLASS
5935

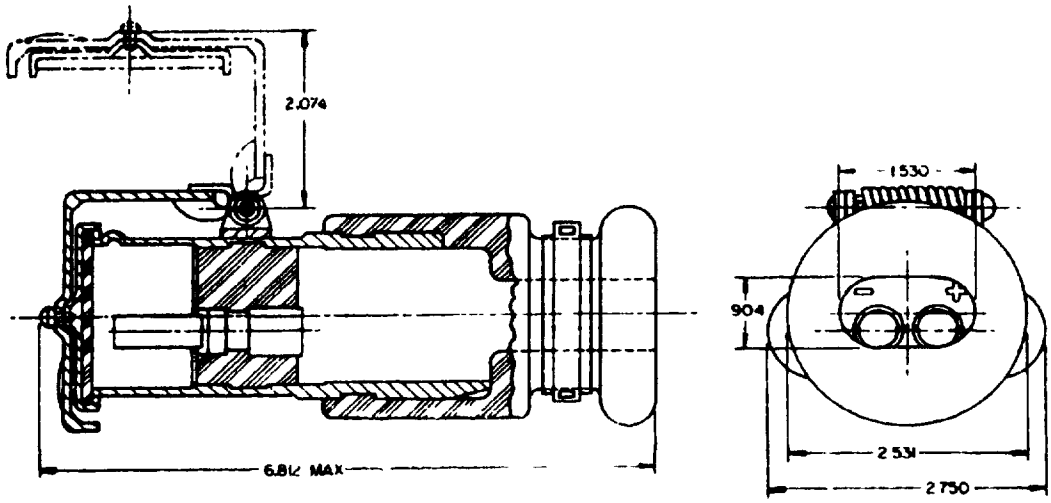

NOTES:

1. FOR MATING RECEPTACLE SEE MS 75058.
2. CONTACT CURRENT RATING IS 245 AMPS.
3. TERMINALS SHALL WITHSTAND A MINIMUM VOLTAGE DIFFERENCE OF 440 VOLTS RMS 60 CPS.
4. DIMENSIONS SHOWN ARE IN INCHES AND FOR ENGINEERING REFERENCE ONLY.
5. MARKING SHALL CONSIST OF THE MS PART NUMBER AND MANUFACTURER'S IDENTIFICATION IN ACCORDANCE WITH MIL-STD-130.
6. FOR DESIGN FEATURE PURPOSES, THIS STANDARD TAKES PRECEDENCE OVER PROCUREMENT DOCUMENTS REFERENCED HEREIN.
7. REFERENCED DOCUMENTS SHALL BE OF THE ISSUE IN EFFECT ON DATE OF INVITATIONS FOR BID.
8. DETAILS OF THIS ASSEMBLY SHALL BE IN ACCORDANCE WITH REFERENCED DRAWINGS (SEE ENGINEERING PARTS LISTS EPL 7728882) AND MAY BE OBTAINED FROM U. S. ARMY TANK-AUTOMOTIVE CENTER, WARREN, MICHIGAN, ATTENTION: STANDARDIZATION BRANCH, SMOTA-RSS.2.

Ⓐ INACTIVE FOR NEW DESIGN AFTER 25 MAY 1973

USE ORDNANCE DRAWING 11682338
PROCUREMENT SPECIFICATION MIL-C-62122

APPROVED 13 SEPTEMBER 1963 REVISED Ⓐ 25 MAY 1973

MS PART NO	ORD DWG NO
MS 75057-1	C 7728882

P A MO	TITLE	MILITARY STANDARD
Other Cust	CONNECTOR, PLUG, ELECTRICAL-SLAVE, 2 CONTACT, 24 VOLT, WATERPROOF	MS 75057(AT)
PROCUREMENT SPECIFICATION NONE	SUPERSEDES	SHEET 1 OF 1

DD FORM 672-1 (Limited coordination) PRECEDING OF THIS FORM ARE OBSOLETE