AMSC N/A
DISTRIBUTION STATEMENT A. Approved for public release; distribution is unlimited.
This military standard is approved for use by all Departments & Agencies of the Department of Defense. Selection for all new engineering and design applications and for repetitive use shall be made from this document.
Review/user information is current as of the date of this document. For future coordination of changes to this document, draft circulation should be based on the information in the current DODISS.
USER SYMBOLS:
REVIEWER SYMBOLS: DLA-IS USAF-82

FED. SUP CLASS 5305

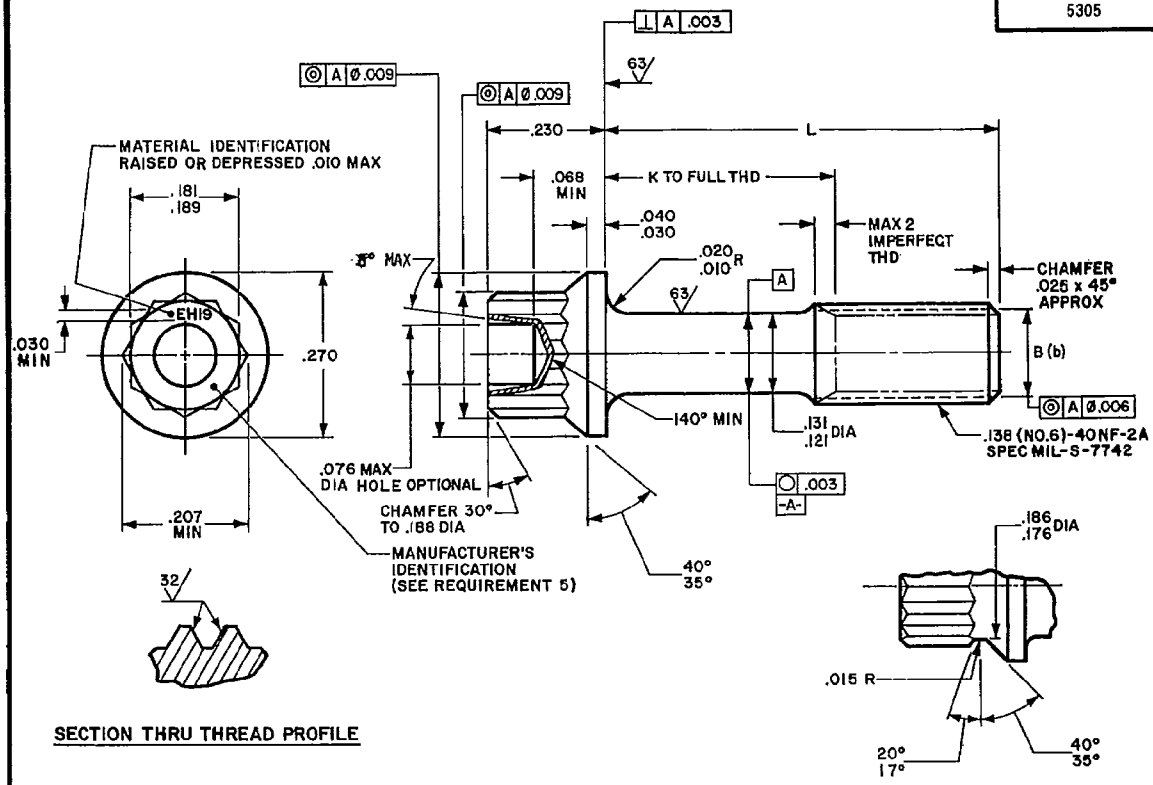

FIGURE I

TABLE I. DIMENSIONS AND WEIGHTS

PART NO.	L	K +.000 -.060	APPROX WEIGHT LB/100	PART NO.	L	K +.000 -.060	APPROX WEIGHT LB/100
MS9177-02	.250	(a)	.30	MS9177-13	.938	.375	.55
MS9177-03	.312	(a)	.32	MS9177-14	1.000	.438	.57
				MS9177-15	1.062	.500	.59
MS9177-04	.375	(a)	.34				
MS9177-05	.438	(a)	.37	MS9177-16	1.125	.562	.61
MS9177-06	.500	(a)	.39	MS9177-17	1.188	.625	.64
				MS9177-18	1.250	.688	.66
MS9177-07	.562	(a)	.41				
MS9177-08	.625	(a)	.44	MS9177-19	1.312	.750	.68
MS9177-09	.688	.125	.46	MS9177-20	1.375	.812	.70
				MS9177-21	1.436	.875	.73
MS9177-10	.750	.188	.48				
MS9177-11	.812	.250	.50	MS9177-22	1.500	.938	.75
MS9177-12	.875	.313	.52				

(a) THREAD TO HEAD. MAXIMUM TWO IMPERFECT THREADS.

(b) B=PITCH DIAMETER (PD)

A INACTIVE FOR NEW DESIGN AFTER 31 DECEMBER 1963

B DENOTES CHANGE

APPROVED 15 AUG 60 REVISED (A) 20 NOV 63 (B) 13 JUNE 88

P.A. NAVY — AS Other Cust	TITLE SCREW, MACHINE-CRES DOUBLE HEXAGON, EXTENDED WASHER HEAD, .138-40	MILITARY STANDARD MS 9177(AS)
PROCUREMENT SPECIFICATION NONE	SUPERSEDES:	SHEET 1 OF 2

DD FORM 1 MAR 72 672-1 (Coordinated) PREVIOUS EDITIONS OF THIS FORM ARE OBSOLETE. PLATE NO. 23405

(PROJ. NO. 5305-N015)

REQUIREMENTS

(B) 1. MATERIAL: CORROSION AND HEAT RESISTANT STEEL PER AMS 5732.

2. MANUFACTURER'S SPECIFICATION: AMS 7478.

3. PART SUBJECT TO FLUORESCENT PENETRANT INSPECTION PER AMS 2645.

4. SURFACE ROUGHNESS: UNLESS OTHERWISE SPECIFIED, 125 MICROINCHES PER ANSI B46.1.

(B) 5. MANUFACTURER'S IDENTIFICATION: THE MANUFACTURER'S SYMBOL PER MIL-STD-1291 (SEE FIG. 1) SHALL BE MARKED ON THE BOLT HEAD (SEE FIG. 1). MARKING MAY BE FORMED BY FORGING, STAMPING, OR LASER. MARKING SHALL BE RAISED OR INDENTED 0.010 INCH MAXIMUM.

NOTES

1. BREAK SHARP EDGES .003-.015 INCH UNLESS OTHERWISE SPECIFIED.

2. DIMENSIONS IN INCHES.

3. UNLESS OTHERWISE SPECIFIED: TOLERANCES: LINEAR DIMENSIONS: ±.010, ANGULAR: ±5°.

4. DO NOT USE UNASSIGNED PART NUMBERS.

5. IN THE EVENT OF A CONFLICT BETWEEN THE TEXT OF THIS STANDARD AND THE REFERENCES CITED HEREIN THE TEXT OF THIS STANDARD SHALL TAKE PRECEDENCE.

6. THIS STANDARD WAS DEVELOPED COOPERATIVELY WITH THE SAE COMMITTEE E-25, GENERAL STANDARDS FOR AEROSPACE PROPULSION SYSTEMS.

APPROVED 15 AUG 60 REVISED (B) FOR CHANGES SEE SHEETS 1 AND 2

USER SYMBOLS:
REVIEWER SYMBOLS:
DLA-IS
USAF-82
"Review/user information is current as of the date of this document. For future coordination of changes to this document, draft circulation should be based on the information in the current DODISS."
This military standard is approved for use by all Departments & Agencies of the Department of Defense. Selection for all new engineering and design applications and for repetitive use shall be made from this document.

P.A. NAVY — AS Other Cust	TITLE SCREW, MACHINE-CRES DOUBLE HEXAGON, EXTENDED WASHER HEAD, 138-40	MILITARY STANDARD MS 9177(AS)
PROCUREMENT SPECIFICATION NONE	SUPERSEDES:	SHEET 2 OF 2