This military standard is approved by the Department of Defense and is mandatory on all activities. Selection for all new engineering and design applications and/or repetitive use shall be made from this document.

Review activities: USAF - 11

Users activities: Navy - MC, XH

MS9198

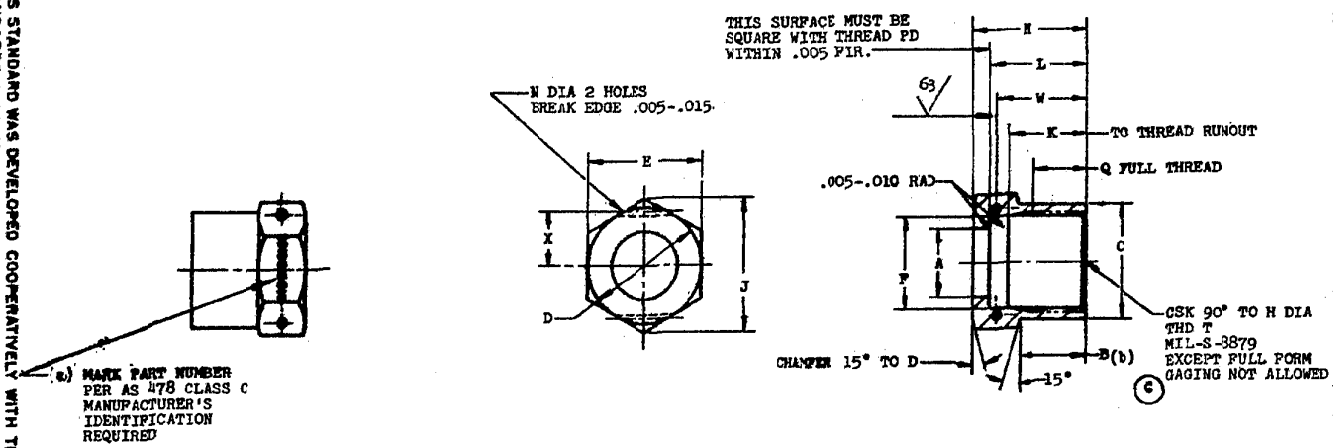

DIAMETERS A AND F SHALL BE CONCENTRIC TO THREAD PD WITHIN .004 FIR. DIAMETER C AND HEXAGON E SHALL BE CONCENTRIC TO THREAD PD WITHIN .010 FIR.

(a) MULTIPLE MARKING PERMISSIBLE PROVIDED POSITIVE IDENTIFICATION IS SHOWN. PARTS MUST BE MARKED BEFORE THREADING.

(b) TO THEORETICAL SHARP CORNER.

MATERIAL: CORROSION AND HEAT RESISTANT STEEL AMS 5646.
SURFACE TEXTURE: ANSI B46.1-1962 UNLESS OTHERWISE SPECIFIED SURFACES TO BE 125 MICROINCHES EXCEPT HEX.
FLUORESCENT PENETRANT INSPECTION PER AMS 2645.
BREAK SHARP EDGES .003-.015 UNLESS OTHERWISE SPECIFIED. FILLETS .005-.020 RAD OR CHAMFER.
DIMENSIONS IN INCHES. UNLESS OTHERWISE SPECIFIED: TOLERANCES; LINEAR DIMENSIONS ±.010, ANGULAR DIMENSIONS ±5°
CLEANING: FINISHED PARTS SHALL BE DEGREASED AND IMMERSED FOR NOT LESS THAN 20 MINUTES IN A SOLUTION OF 1 VOLUME OF NITRIC ACID (SP GR 1.42) AND 9 VOLUMES OF WATER AT ROOM TEMPERATURE.
DO NOT USE UNASSIGNED PART NUMBERS

AS & AMS ARE SOCIETY OF AUTOMOTIVE ENGINEERS, INC. PUBLICATIONS

REFERENCED DOCUMENTS SHALL BE OF THE ISSUE IN EFFECT ON DATE OF INVITATIONS FOR BID.

APPROVED 28 May 62 REVISED (A) 31 Jul 64 (B) 4 May 70 (C) 13 Dec 72

FED. SUP CLASS 4730

THIS STANDARD WAS DEVELOPED COOPERATIVELY WITH THE MILITARY SERVICES BY THE SAE AEROSPACE PART STANDARDS DIVISION

(C) FOR CHANGES SEE SHEETS 1 & 2.

P.A. USAF-82 (C)
Other Cust Navy-AS

TITLE NUT, TUBE COUPLING - CRES AMS 5646

PROCUREMENT SPECIFICATION NONE

SUPERSEDES:

MILITARY STANDARD

MS9198

SHEET 1 OF 2

DD FORM 1 OCT 57 672-1

MS9198

FED. SUP CLASS
4730

PART NO.	NOM TUBE OD REF	THREAD T	A DIA +.003 -.000	B ±.015 (b)	C DIA +.005	D DIA	E	F DIA
MS9198-02	.125	.3125-24UNJF-3B	.180	.435	.425	.438	.430- .439	.272- .280
MS9198-03	.188	.375 -24UNJF-3B	.242	.452	.490	.500	.492- .502	.334- .342
MS9198-04	.250	.4375-20UNJF-3B	.305	.467	.550	.562	.553- .564	.388- .397
MS9198-05	.312	.500 -20UNJF-3B	.374	.440	.615	.625	.616- .627	.451- .459
MS9198-06	.375	.5625-18UNJF-3B	.440	.467	.678	.688	.679- .690	.508- .517
MS9198-07	.438	.625 -18UNJF-3B	.502	.493	.740	.750	.741- .752	.570- .579
MS9198-08	.500	.750 -16UNJF-3B	.570	.493	.865	.875	.865- .877	.689- .698
MS9198-09	.562	.8125-16UNJ-3B	.634	.493	.927	.937	.928- .940	.751- .760
MS9198-10	.625	.875 -14UNJF-3B	.698	.617	.990	1.000	.990-1.002	.805- .815
MS9198-11	.688	1.000 -12UNJF-3B	.770	.588	1.115	1.125	1.114-1.127	.918- .930
MS9198-12	.750	1.0625-12UNJ-3B	.834	.588	1.180	1.250	1.239-1.252	.981- .991
MS9198-14	.875	1.1875-12UNJ-3B	.961	.615	1.320	1.375	1.364-1.377	1.106-1.116
MS9198-16	1.000	1.3125-12UNJ-3B	1.089	.652	1.433	1.500	1.489-1.502	1.231-1.241
MS9198-18	1.125	1.500 -12UNJF-3B	1.217	.680	1.620	1.750	1.738-1.752	1.419-1.429
MS9198-20	1.250	1.625 -12UNJ-3B	1.347	.727	1.745	1.812	1.800-1.814	1.544-1.554
MS9198-24	1.500	1.875 -12UNJ-3B	1.617	.880	1.995	2.125	2.113-2.127	1.794-1.804
MS9198-28	1.750	2.250 -12UNJ-3B	1.850	.930	2.410	2.500	2.487-2.502	2.169-2.179
MS9198-32	2.000	2.500 -12UNJ-3B	2.187	1.060	2.660	2.750	2.737-2.752	2.419-2.429
MS9198-40	2.500	3.000 -12UNJ-3B	2.667	.860	3.200	3.250	2.237-3.252	2.919-2.929
MS9198-42	3.000	3.500 -12UNJ-3B	3.180	.910	3.700	3.812	3.793-3.814	3.419-3.429

NOM TUBE OD REF	H ±.030 -.000	J MIN	K MAX	L ±.005	M	N	Q MIN		X	APPROX WEIGHT LB/100
.125	.312	.491	.425	.575	.650	.045-.050	.300	.535	.180- .190	1.210
.188	.375	.561	.441	.592	.667	.057-.062	.316	.552	.210- .220	1.475
.250	.438	.631	.482	.607	.682	.057-.062	.332	.587	.245- .255	1.830
.312	.500	.703	.482	.610	.690	.065-.075	.332	.565	.280- .290	2.600
.375	.562	.775	.535	.637	.742	.065-.075	.387	.592	.310- .320	2.920
.438	.625	.846	.536	.663	.768	.065-.075	.368	.618	.336- .356	3.422
.500	.750	.987	.569	.723	.828	.065-.075	.383	.648	.400- .420	4.680
.562	.812	1.059	.589	.723	.828	.065-.075	.383	.668	.427- .447	5.314
.625	.875	1.130	.667	.817	.927	.065-.075	.453	.717	.465- .485	6.310
.688	1.000	1.271	.738	.868	.968	.065-.075	.488	.818	.520- .540	7.859
.750	1.062	1.414	.738	.868	.968	.065-.075	.488	.818	.580- .600	9.907
.875	1.188	1.556	.765	.916	1.015	.065-.075	.515	.865	.645- .665	12.164
1.000	1.312	1.699	.786	.962	1.062	.065-.075	.536	.912	.715- .735	13.637
1.125	1.500	1.985	.800	.990	1.120	.065-.075	.550	.945	.840- .860	19.830
1.250	1.625	2.054	.810	1.017	1.167	.065-.075	.560	.967	.890- .910	20.016
1.500	1.875	2.411	.937	1.170	1.320	.065-.075	.687	1.100	1.040-1.060	27.903
1.750	2.250	2.838	.940	1.170	1.370	.065-.075	.695	1.170	1.255-1.275	41.710
2.000	2.500	3.123	1.050	1.300	1.500	.065-.075	.800	1.300	1.395-1.415	49.000
2.500	3.000	3.693	.850	1.100	1.300	.065-.075	.600	1.100	1.680-1.700	60.621
3.000	3.500	4.334	.900	1.150	1.350	.065-.075	.650	1.150	2.000-2.020	78.529

Users activities: Navy – MC, XH

Review activities: USAF – 11

This military standard is approved by the Department of Defense and is mandatory on all activities. Selection for all new engineering and design applications and for repetitive use shall be made from this document.

APPROVED 28 May 62 REVISED (C) FOR CHANGES SEE SHEETS 1 AND 2.

THIS STANDARD WAS DEVELOPED COOPERATIVELY WITH THE MILITARY SERVICES BY THE SAE AEROSPACE PART STANDARDS DIVISION

P.A. USAF – 82
Other Cust: Navy – AS (C)

TITLE
NUT, TUBE COUPLING – CRES AMS 5646

MILITARY STANDARD
MS9198

PROCUREMENT SPECIFICATION
NONE

SUPERSEDES:

SHEET 2 OF

DD FORM 672-1