THE REQUIREMENTS FOR ACQUIRING THE PRODUCT(S) DESCRIBED HEREIN SHALL CONSIST OF THIS SPECIFICATION SHEET AND THE ISSUE OF THE FOLLOWING SPECIFICATION LISTED IN THAT ISSUE OF THE DODISS SPECIFIED IN THE SOLICITATION: WW-P-460

THIS SPECIFICATION IS APPROVED FOR USE BY ALL DEPARTMENTS AND AGENCIES OF THE DEPARTMENT OF DEFENSE.

FORM APPROVED
OMB NO. 0704-0188

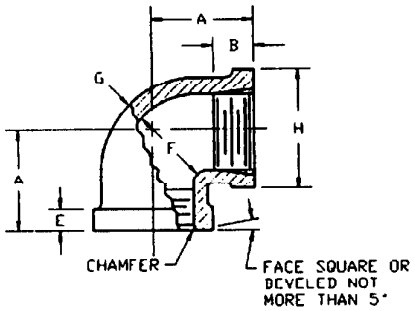

TABLE I. Dash number to pipe size.

Dash Number	Nominal Pipe Size
- 1	1/8
- 2	1/4
- 3	3/8
- 4	1/2
- 5	3/4
- 6	1
- 7	1 1/4
- 8	1 1/2
- 9	2
-10	2 1/2
-11	3
-12	4

NOTES:

1. MATERIAL: Brass or bronze in accordance with ASME B16.15.
2. PROTECTIVE COATING: None.
3. DIMENSIONS: In accordance with ASME B16.15, Table 3 (Table A3).
4. THREADING: As specified in ASME B16.15.
5. MARKING: In accordance with ASME B16.15.
6. PART NUMBER: The MS part number consists of the MS number and the dash number. When left-hand threads are required, add the letter "L" to the part number.

   Examples:

   MS51845 - 1 represents a 1 NPS 90-deg elbow.
   MS51845 - 9L represents a 2 NPS 90-deg elbow, left-hand threads.

7. For design feature purposes, this standard takes precedence over procurement documents referenced herein.
8. Referenced documents shall be of the issue in effect on the date of the invitation for bid.

Revision letters are not used to denote changes due to the extensiveness of the changes.

PREPARING ACTIVITY: NAVY - YD1 CUSTODIANS: ARMY - AR NAVY - YD1 AIR FORCE - 99 DLA - REVIEW: ARMY-ME AIR FORCE-82 DLA-CS NAVY - MC PROJECT NUMBER: 4730-0186	MILITARY SPECIFICATION SHEET TITLE ELBOWS, PIPE, BRASS OR BRONZE, THREADED, 90-DEG, STRAIGHT, CLASS 125	SPECIFICATION SHEET NUMBER INCH-POUND MS51845C 28 FEBRUARY 1994 SUPERSEDING MS51845B 31 JANUARY 1983 AMSC - N/A FSC - 4730

DISTRIBUTION STATEMENT A. APPROVED FOR PUBLIC RELEASE, DISTRIBUTION IS UNLIMITED.

DD FORM 672, MAY 88