NOTICE: WHEN GOVERNMENT DRAWINGS, SPECIFICATIONS, OR OTHER DATA ARE USED FOR ANY PURPOSE OTHER THAN IN CONNECTION WITH A DEFINITELY RELATED GOVERNMENT PROCUREMENT OPERATION, THE UNITED STATES GOVERNMENT THEREBY INCURS NO RESPONSIBILITY, NOR ANY OBLIGATION WHATSOEVER; AND THE FACT THAT THE GOVERNMENT MAY HAVE FORMULATED, FURNISHED, OR IN ANY WAY SUPPLIED THE SAID DRAWINGS, SPECIFICATIONS, OR OTHER DATA IS NOT TO BE REGARDED BY IMPLICATION OR OTHERWISE AS IN ANY MANNER LICENSING THE HOLDER OR ANY OTHER PERSON OR CORPORATION, OR CONVEYING ANY RIGHTS OR PERMISSION TO MANUFACTURE, USE, OR SELL ANY PATENTED INVENTION THAT MAY IN ANY WAY BE RELATED THERETO.

REVISIONS			
SYMBOL	DESCRIPTION	DATE	APPROVAL

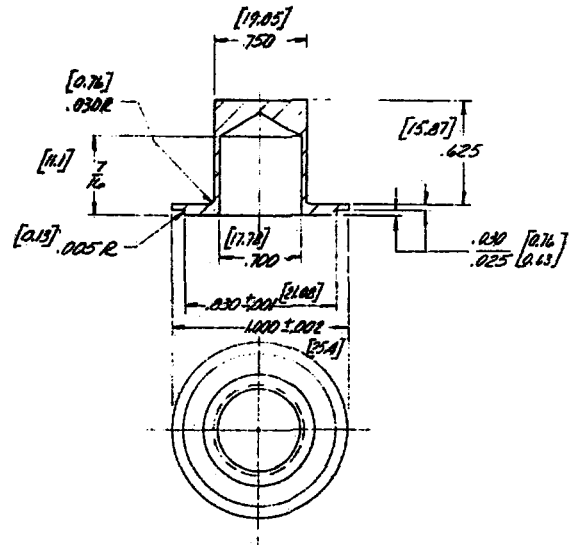

NOTES:

1. METRIC EQUIV. (mm) FOR GENERAL INFO. & ARE BASED ON 1" = 25.4 mm
2. USE WITH DESC DWG ⊘ 76024

DWG No.

REV

DRAFTSMAN JD	DATE 15 Apr 76	DEFENSE ELECTRONICS SUPPLY CENTER DAYTON, OHIO	
CHECKER	DATE		
ENGINEER J Buchanan	DATE 15 Apr 76	TITLE TUNING SLUG (Y-638) TUBE TYPE 8980	
UNLESS OTHERWISE SPECIFIED DIMENSIONS ARE IN INCHES TOLERANCES OF .XX ±.02 .XXX ±.005 ANGLES ± 1/2°			
MATERIAL STAIN STL		CODE IDENT. NO. 14933	DWG C 76023
TREATMENT			
NEXT ASSY / QUAN.	FINISH 16/	SCALE 2:1	WT / SHEET 1 OF 1
APPLICATION			

DESC FORM JUL 63 80C

ENGINEERING DRAWING

AP-SSP-S-OCT 63 200