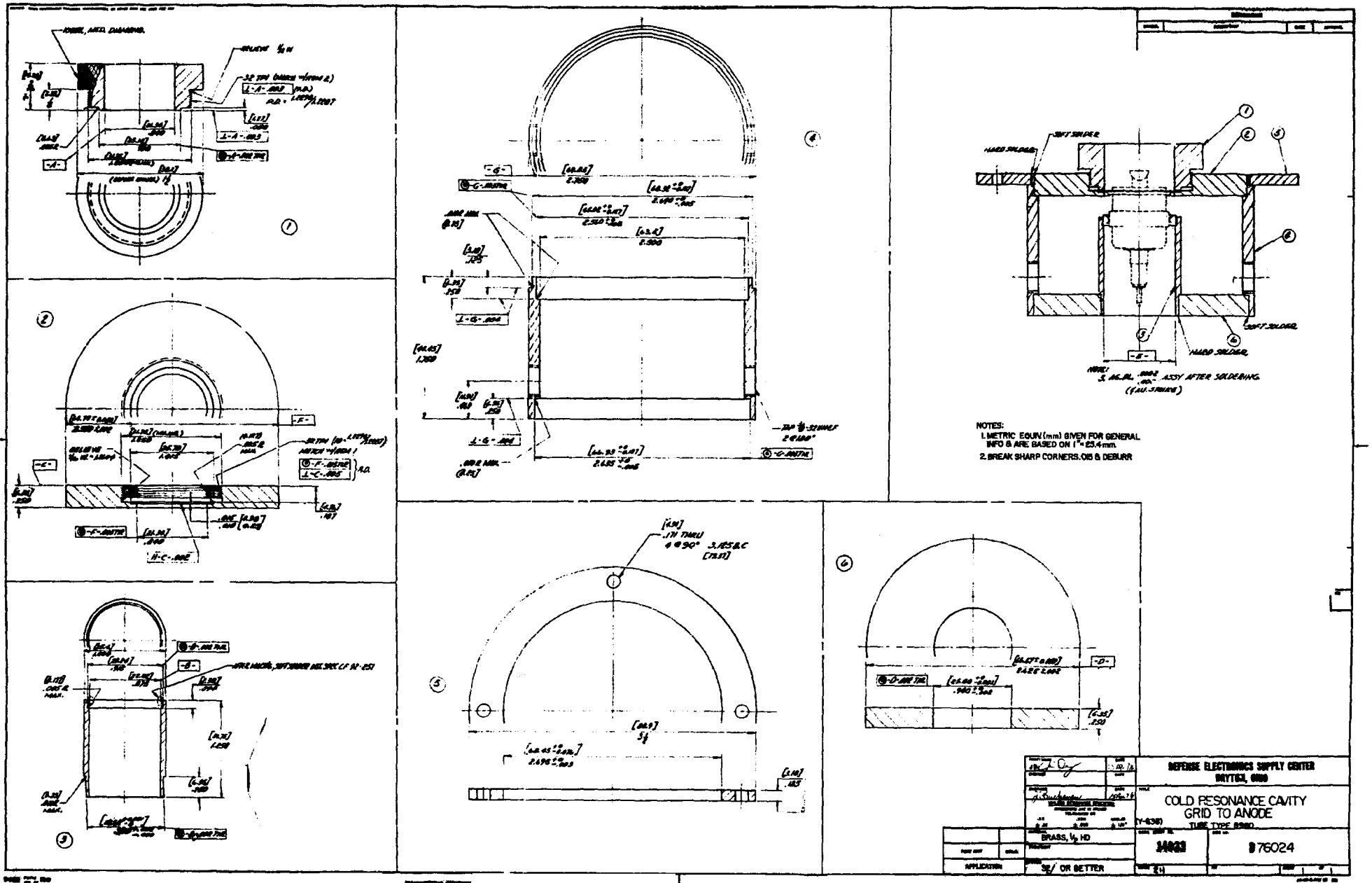

NOTES:
1. METRIC EQUIV. (mm) GIVEN FOR GENERAL INFO & ARE BASED ON 1" = 25.4 mm.
2. BREAK SHARP CORNERS .015 & DEBURR
SOFT SOLDER
HARD SOLDER
ASSY AFTER SOLDERING
DEFENSE ELECTRONICS SUPPLY CENTER
DAYTON, OHIO
COLD RESONANCE CAVITY
GRID TO ANODE
TUBE TYPE 8980
BRASS, 1/2 HD
32/ OR BETTER
APPLICATION
B76024

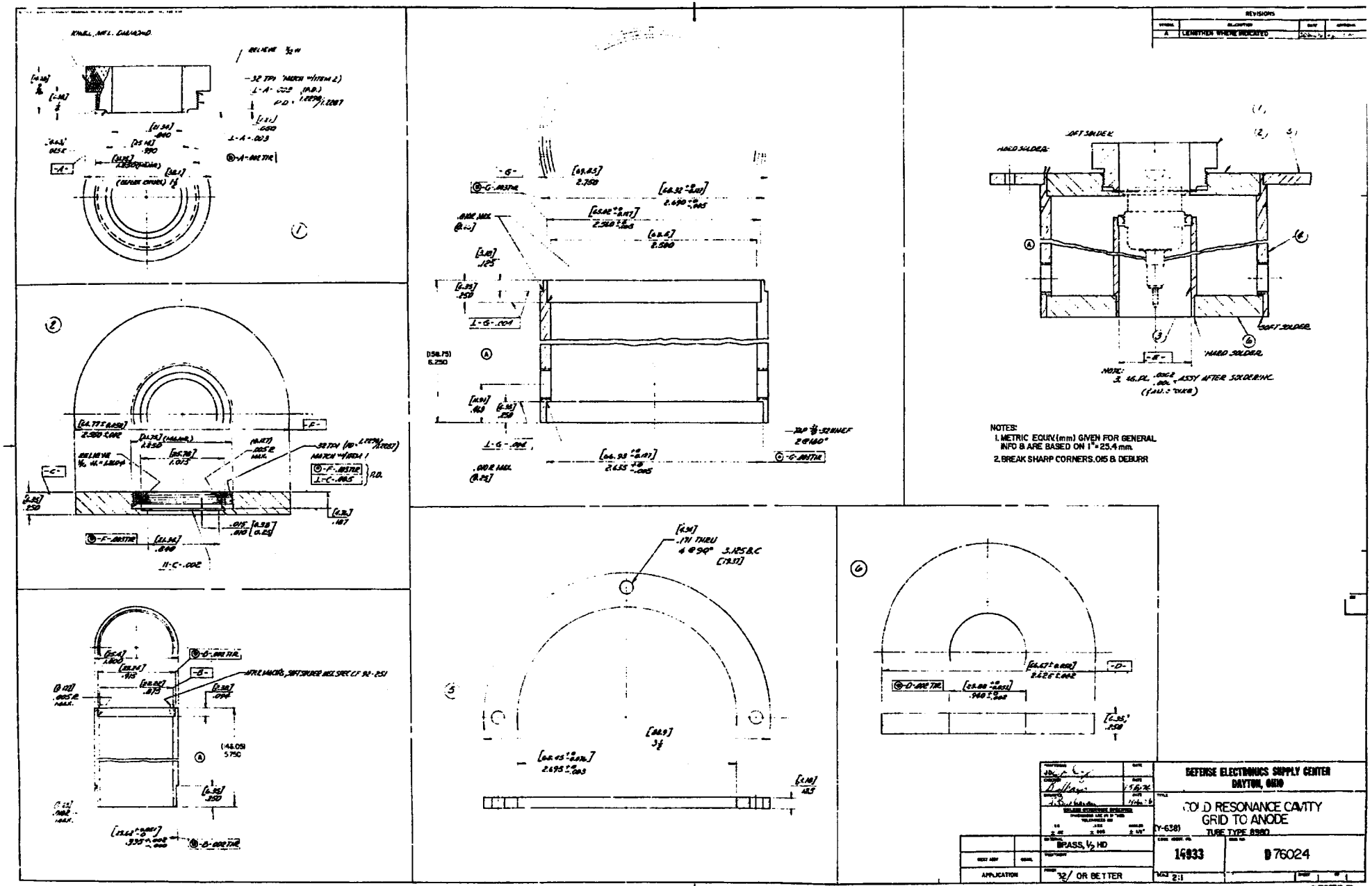
REVISIONS
A
LENGTHEN WHERE INDICATED
SOFT SOLDER
HARD SOLDER
NOTES:
1. METRIC EQUIV.(mm) GIVEN FOR GENERAL INFO & ARE BASED ON 1" = 25.4 mm.
2. BREAK SHARP CORNERS .015 & DEBURR
BRASS, ½ HD
APPLICATION
32/ OR BETTER
DEFENSE ELECTRONICS SUPPLY CENTER
DAYTON, OHIO
COLD RESONANCE CAVITY
GRID TO ANODE
(Y-638)
TUBE TYPE 8980
14933
D 76024
2:1
EC-040-918-000C