NOTICE OF REVISION (NOR)

(See MIL-STD-480 for instructions)

This revision described below has been authorized for the document listed.

DATE (YYMMDD)	Form Approved OMB No. 0704-0188
92-09-09	

Public reporting burden for this collection is estimated to average 1 hour per response, including the time for reviewing instructions, searching existing data sources, gathering and maintaining the data needed, and completing and reviewing the collection of information. Send comments regarding this burden estimate or any other aspect of this collection of information, including suggestions for reducing this burden, to Washington Headquarters Services, Directorate for Information Operations and Reports, 1215 Jefferson Davis Highway, Suite 1204, Arlington, VA 22202-4302, and to the Office of Information and Regulatory Affairs, Office of Management and Budget, Washington, DC 20503.

1. ORIGINATOR NAME AND ADDRESS Defense Electronics Supply Center Dayton, Ohio 45444-5270	**2. CAGE CODE** 14933	**3. NOR NO.** 5999-R001-92
	4. CAGE CODE 14933	**5. DOCUMENT NO.** 84087
6. TITLE OF DOCUMENT DELAY LINES, 1 TO 5 TAPS, 14-PIN DIP COMPATIBLE, TTL INTERFACED	**7. REVISION LETTER** (Current) G	(New) H
	8. ECP NO. NONE	

9. CONFIGURATION ITEM (OR SYSTEM) TO WHICH ECP APPLIES

10. DESCRIPTION OF REVISION

Page 1: Revisions letter column; add "H".
Revisions description column; add "Changes in accordance with NOR 5999-R001-92".
Revisions date column; add "92-09-09".

Page 7: Add note 5 as follows:

"Leads shall be free of case meniscus and other foreign material and shall be solderable for a minimum of .010" above the seating plane of the delay line."

Pages 11-13, Similar vendor PIN: Delete "CAGE 92912" column.

Page 14: Delete CAGE "92912" and "Bel Fuse, Incorporated
198 Van Vorst Street
Jersey City, NJ 07302
Phone: (201) 432-0463"

11. THIS SECTION FOR GOVERNMENT USE ONLY

a. CHECK ONE

[X] EXISTING DOCUMENT SUPPLEMENTED BY THIS NOR MAY BE USED IN MANUFACTURE.

[ ] REVISED DOCUMENT MUST BE RECEIVED BEFORE MANUFACTURER MAY INCORPORATE THIS CHANGE.

[ ] CUSTODIAN OF MASTER DOCUMENT SHALL MAKE ABOVE REVISION AND FURNISH REVISED DOCUMENT TO:

b. ACTIVITY AUTHORIZED TO APPROVE CHANGE FOR GOVERNMENT DESC-EMM	SIGNATURE AND TITLE Daniel E. Moore CHIEF, MATERIALS AND PARTS BRANCH	**DATE (YYMMDD)** 92-09-09
12. ACTIVITY ACCOMPLISHING REVISION **DESC-EMM**	REVISION COMPLETED (Signature) Bud Boulter	DATE (YYMMDD) 92-09-09

DD Form 1695, JUL 88 Previous editions are obsolete.

REVISIONS

LTR	DESCRIPTION	DATE	APPROVED
A	Added a second source for dash numbers 37 through 61.	85-04-10	I.R. Jones
B	Added dash numbers 62 through 66.	85-05-02	I.R. Jones
C	Added dash numbers 67 through 77. Editorial changes.	87-08-06	Randy Larson
D	Replaced MIL-D-23859 references with MIL-D-83532. Changed pin length dimensions. Added note 4 to figure 1. Added three vendors. Editorial changes throughout. J.W.	88-10-07	Randy Larson
E	Changed thermal shock requirements. Added two vendors. Editorial changes throughout. B.B.	89-08-29	D.E. Morgan
F	Changed tolerance on .300 dimension between lead rows (figure 1, all configurations). Added one vendor. Added "Inactive" notice to page 1. Editorial changes throughout. J.W.	90-09-11	Randy Larson
G	Changed paragraphs 3.6 and 3.8.1. Editorial changes throughout.	91-11-26	R. Opsinski

INACTIVE FOR NEW DESIGN
Delay lines contained herein which have qualified MIL-D-83532 sources are inactive for new design effective on the date of Revision F. Delay lines not covered by MIL-D-83532 may continue to be procured to this drawing.

THIS DRAWING WAS REVIEWED ON 21 June 2000 AND IS VALID FOR ACQUISITION

Prepared in accordance with DOD-STD-100

Selected item drawing

REV																					
PAGE																					
REV																					
PAGE																					

REV STATUS OF PAGES																		
	REV	G	G	G	F	F	F	F	G	G	G	G	G	G	G			
	PAGES	1	2	3	4	5	6	7	8	9	10	11	12	13	14			

PMIC N/A	PREPARED BY Christopher A. Rauch	DEFENSE ELECTRONICS SUPPLY CENTER DAYTON, OHIO
Original date of drawing: 84-09-04	CHECKED BY Randy Larson	TITLE DELAY LINES, 1 TO 5 TAPS, 14-PIN DIP COMPATIBLE, T^2L INTERFACED
	APPROVED BY Ivan R. Jones	
	SIZE A / CODE IDENT. NO. 14933	DWG NO. 84087
	REV G	PAGE 1 OF 14

DESC FORM 144
JUL 91 AMSC N/A 5999-E135

DISTRIBUTION STATEMENT A. Approved for public release; distribution is unlimited.

1. SCOPE

1.1 Scope. This drawing describes the requirements for a family of delay lines, 1 to 5 taps, 14-pin DIP compatible.

1.2 Part or Identifying Number (PIN). The complete PIN shall be as shown in the following example:

84087	-01
Drawing number	Dash number (See table I)

2. APPLICABLE DOCUMENTS

2.1 Government specifications and standard. Unless otherwise specified, the following specifications and standard, of the issues listed in the edition of the Department of Defense Index of Specifications and Standards specified in the solicitation, form a part of this drawing to the extent specified herein.

SPECIFICATIONS

MILITARY

DOD-D-1000 - Drawing, Engineering and Associated List.

MIL-T-10727 - Tin Plating, Electrodeposited or Hot-Dipped, For Ferrous and Non-Ferrous Metals.

MIL-S-19491 - Semiconductor Device, Packaging of.

MIL-D-83532 - Delay Lines, Active, General Specification for.

STANDARD

MILITARY

MIL-STD-202 - Test Methods for Electronic and Electrical Component Parts.

(Copies of specifications and standard required by manufacturers in connection with specific acquisition functions may be obtained from the Standardization Documents Order Desk, Building 4D, 700 Robbins Avenue, Philadelphia, PA 19111-5094.)

2.2 Order of precedence. In the event of a conflict between the text of this drawing and the references cited herein, the text of this drawing shall take precedence.

3. REQUIREMENTS

3.1 Interpretation. This drawing shall be interpreted in accordance with DOD-D-1000.

3.2 Workmanship. Parts shall be free of flash pits, voids, and excessive mold marks. Visible parting lines are acceptable.

3.3 Case material. Case material shall be in accordance with MIL-D-83532.

3.4 Dimensions and configurations. See figure 1.

3.5 Terminal material. Terminal material shall be copper, nickel, or alloy 42, tin plated in accordance with MIL-T-10727, type I or II.

3.6 Temperature coefficient of delay (dash numbers -01 through -36 only). 2 ns + 500 ppm/°C maximum at output.

3.7 Delay times. See table I.

3.8 Delay tolerance. ±2 ns or ±5 percent, whichever is greater.

3.8.1 Delay variance (dash numbers -37 through -77 only). Delay variance shall be ±2 ns or 2 percent, whichever is greater, over the temperature range of -55°C to +125°C at 5 V dc (supply voltage) ±10 percent.

3.9 Rise time. Rise time at any tap shall be 4 ns maximum.

3.10 Pulse width. Minimum operating pulse width shall be 20 percent of total delay time and maximum operating duty cycle is 50 percent.

3.11 Supply voltage (V_{CC}). 4.5 V dc to 5.5 V dc.

3.12 Logic 1 input current. 50 μA maximum.

3.13 Logic 0 input current. -2 mA maximum.

3.14 Logic 1, V_{OUT}. 2.5 V minimum.

3.15 Logic 0, V_{OUT}. 0.5 V maximum.

3.16 Logic 1 fan-out. 20/tap maximum (1 tap is capable of driving 20 TTL inputs).

3.17 Logic 0 fan-out. 10/tap maximum (1 tap is capable of driving 10 TTL inputs).

3.18 Power dissipation. 385 mW maximum at any tap.

3.19 Thermal shock. Method 107, MIL-STD-202, test condition B-1, 15 minutes at temperature extremes. Five minutes at +25°C following each extreme condition.

3.20 Sealing. As specified in MIL-D-83532.

3.21 Terminal strength. MIL-STD-202, method 211, test condition C and in accordance with MIL-D-83532.

3.22 Vibration. MIL-STD-202, method 204, test condition B and in accordance with MIL-D-83532.

3.23 Shock. MIL-STD-202, method 213, test condition D and in accordance with MIL-D-83532.

3.24 Immersion. MIL-STD-202, method 104, test condition A and in accordance with MIL-D-83532.

3.25 Moisture resistance. As specified in MIL-D-83532.

3.26 Solderability. As specified in MIL-D-83532.

3.27 Resistance to solvents. As specified in MIL-D-83532.

3.28 Operating temperature range. -55°C to +125°C.

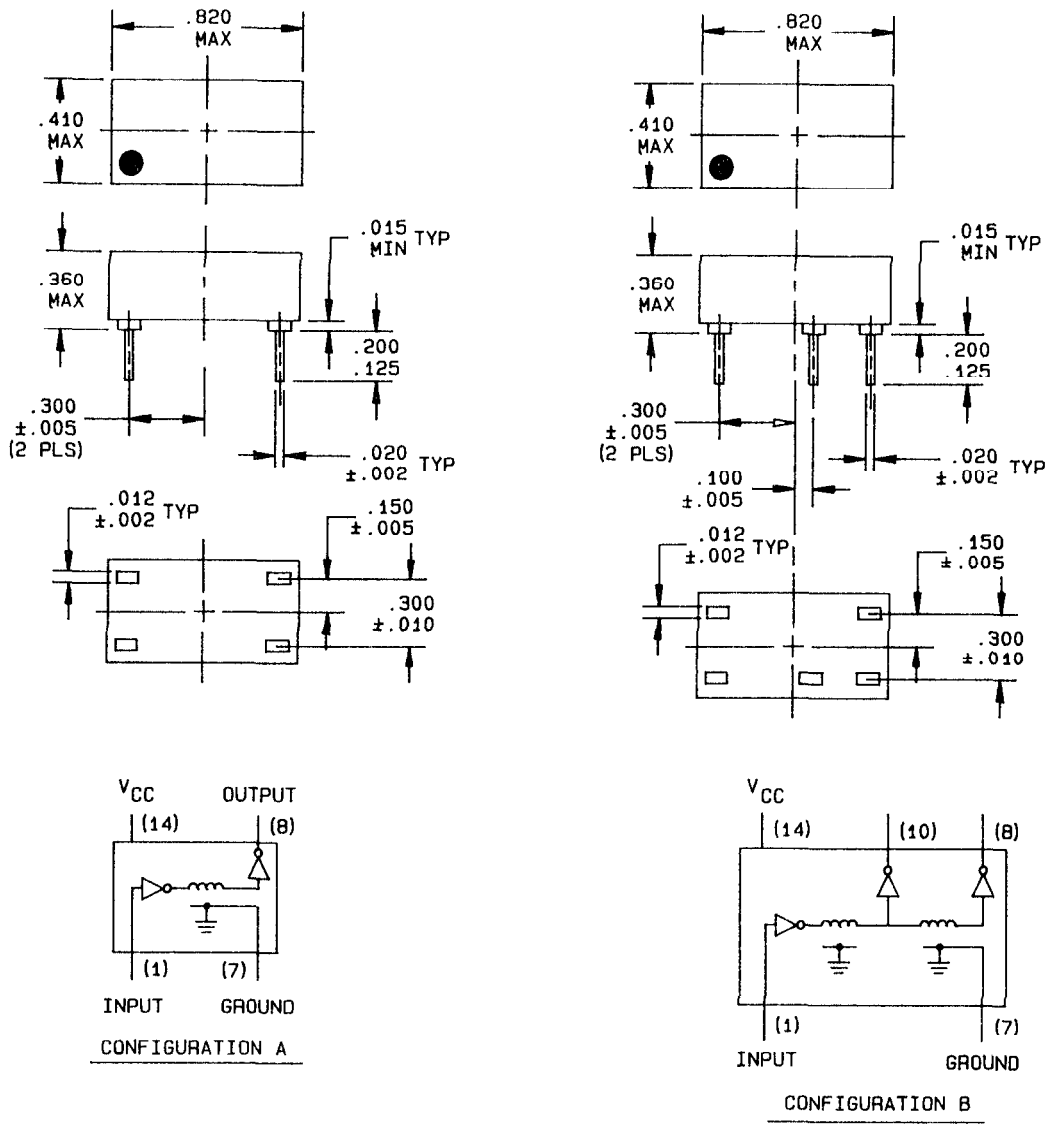

FIGURE 1. Dimensions and configurations.

DEFENSE ELECTRONICS SUPPLY CENTER DAYTON, OHIO	SIZE A	CODE IDENT. NO. 14933	DWG NO. 84087
		REV F	PAGE 4

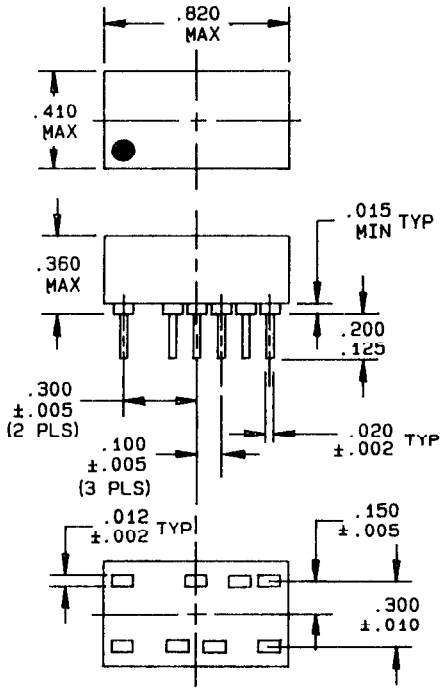

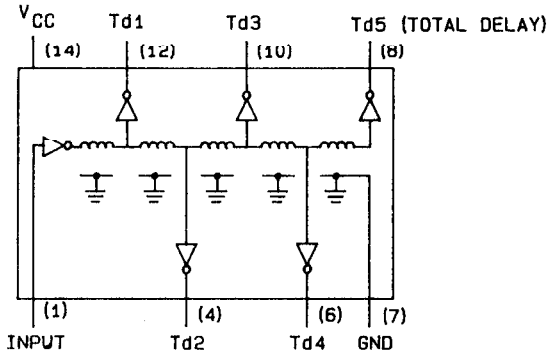

CONFIGURATION C

FIGURE 1. Dimensions and configurations - Continued.

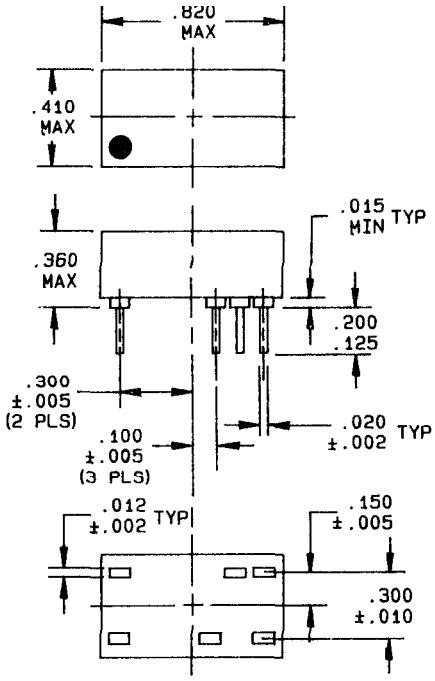

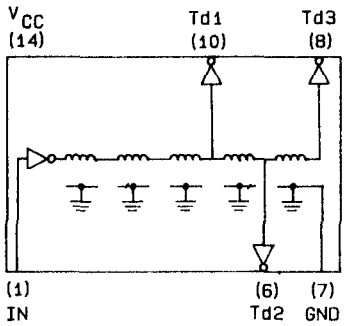

CONFIGURATION D

FIGURE 1. Dimensions and configurations - Continued.

Inches	mm
.002	0.05
.005	0.13
.010	0.25
.012	0.30
.015	0.38
.020	0.51
.100	2.54
.125	3.18
.150	3.81
.200	5.08
.300	7.62
.360	9.14
.410	10.41
.820	20.83

NOTES:
1. Dimensions are in inches.
2. Metric equivalents are given for general information only.
3. Black dot represents the location of pin 1.
4. Location and shape of standoffs are optional. Height shall be as indicated.

FIGURE 1. Dimensions and configurations - Continued.

TABLE I. PIN's and delay values.

PIN 84087-	Delay at pin 12 (ns)	Delay at pin 4 (ns)	Delay at pin 10 (ns)	Delay at pin 6 (ns)	Delay at pin 8 (ns)	Number of delays	Configuration
01					10		
02					20		
03					30		
04					40		
05					50		
06					60		
07	N/A	N/A	N/A	N/A	80	1	A
08					100		
09					150		
10					200		
11					300		
12					400		
13					500		
14			10		20		
15			20		40		
16			25		50		
17			30		60		
18			40		80		
19			50		100		
20	N/A	N/A	75	N/A	150	2	B
21			100		200		
22			150		300		
23			200		400		
24			250		500		
25			65		110		
26	5	10	15	20	25		
27	10	20	30	40	50		
28	15	30	45	60	75		
29	20	40	60	80	100		
30	25	50	75	100	125		
31	30	60	90	120	150	5	C
32	40	80	120	160	200		
33	50	100	150	200	250		
34	60	120	180	240	300		
35	80	160	240	320	400		
36	100	200	300	400	500		
37	N/A	N/A	N/A	N/A	10	1	A
38					20		
39					30		
40					40		
41					50		
42					60		
43					80		
44					100		

TABLE I. PIN's and delay values - Continued.

PIN 84087-	Delay at pin 12 (ns)	Delay at pin 4 (ns)	Delay at pin 10 (ns)	Delay at pin 6 (ns)	Delay at pin 8 (ns)	Number of delays	Configuration
45					150		
46	N/A	N/A	N/A	N/A	200	1	A
47					300		
48					400		
49					500		
50			10		20		
51			20		40		
52			25		50		
53			30		60		
54	N/A	N/A	40	N/A	80	2	B
55			50		100		
56			75		150		
57			100		200		
58			150		300		
59			200		400		
60			250		500		
61			65		110		
62	N/A	N/A	N/A	N/A	600	1	A
63					700		
64					800		
65					900		
66					1000		
67			15	20	25		
68			30	40	50		
69			45	60	75		
70			60	80	100		
71	N/A	N/A	75	100	125	3	D
72			90	120	150		
73			120	160	200		
74			150	200	250		
75			300	400	500		
76	N/A	N/A	N/A	N/A	675	1	A
77					725		

3.29 Storage temperature. -65°C to +130°C.

3.30 Marking. Marking shall be in accordance with MIL-D-83532, except the military PIN shall be as specified in 1.2 herein.

3.31 Certificate of compliance. Each manufacturer desiring to be listed as a suggested source of supply (see 6.4) shall submit a certificate of compliance to DESC-EMM. The certificate shall state that the manufacturer's products meet all the requirements of this drawing.

4. QUALITY ASSURANCE PROVISIONS

4.1 Quality conformance inspection.

4.1.1 Inspection of product for delivery. Inspection of product for delivery shall consist of compliance with the group A inspection of MIL-D-83532.

4.1.2 Statement in lieu of inspection. The acquiring activity, at its discretion, may accept a statement of compliance with the group A inspection in lieu of the manufacturer performing the group A inspection (see 6.2c).

4.2 Inspection of packaging. The sampling and inspection of the preservation, packing, and container marking shall be in accordance with the requirements for semiconductor devices in MIL-S-19491.

5. PACKAGING

5.1 Packaging requirements. The requirements for packaging shall be in accordance with the provisions specified for semiconductor devices in MIL-S-19491.

6. NOTES

6.1 Intended use. Devices conforming to this drawing are intended for use when military specifications do not exist and qualified military devices that will perform the required function are not available for OEM application.

6.2 Ordering data. The acquisition document should include the following, as a minimum:

a. Complete PIN (see 1.2).

b. Requirement for the manufacturer to include one copy of the quality conformance inspection data with each shipment of parts (if applicable, see 4.1 and 4.1.2).

c. Whether the manufacturer performs the group A inspection or provides a statement of compliance with the group A inspection (see 4.1.2).

d. Requirement for the manufacturer to notify the acquiring activity in the event of a change in the product.

6.3 Assistance. Questions or comments pertaining to this drawing should be addressed to DESC-EMM, 1507 Wilmington Pike, Dayton, OH 45444-5283, telephone (513) 296-5255.

6.4 Suggested sources of supply. Suggested sources of supply are listed below. Additional sources will be added as they become available. This table is not a qualified products list or an approved source list. The vendors indicated have submitted certificates of compliance to DESC (see 3.31); however, parts may be ordered from any manufacturer who agrees to supply products which conform to all the requirements of this drawing.

DESC drawing PIN 84087-	Similar vendor PIN 1/								
	CAGE 90095	CAGE 00222	CAGE 50965	CAGE 16714	CAGE 92912	CAGE 22519	CAGE 32155	CAGE 62694	CAGE 03947
01	TTL1S010MX	14GC10	8487-01	DSP087-01	M477-0010-97	DDU4-8833-1	AVB-0010	D-88-01	082376-501
02	TTL1S020MX	14GC20	8487-02	DSP087-02	M477-0020-97	DDU4-8833-2	AVB-0020	D-88-02	082376-502
03	TTL1S030MX	14GC30	8487-03	DSP087-03	M477-0030-97	DDU4-8833-3	AYB-0030	D-88-03	082376-503
04	TTL1S040MX	14GC40	8487-04	DSP087-04	M477-0040-97	DDU4-8833-4	AYB-0040	D-88-04	082376-504
05	TTL1S050MX	14GC50	8487-05	DSP087-05	M477-0050-97	DDU4-8833-5	AYB-0050	D-88-05	082376-505
06	TTL1S060MX	14GC60	8487-06	DSP087-06	M477-0060-97	DDU4-8833-6	AYB-0060	D-88-06	082376-506
07	TTL1S080MX	14GC80	8487-07	DSP087-07	M477-0080-97	DDU4-8833-7	AYB-0080	D-88-07	082376-507
08	TTL1S100MX	14GC100	8487-08	DSP087-08	M477-0100-97	DDU4-8833-8	AYB-0100	D-88-08	082376-508
09	TTL1S150MX	14GC150	8487-09	DSP087-09	M477-0150-97	DDU4-8833-9	AYB-0150	D-88-09	082376-509
10	TTL1S200MX	14GC200	8487-10	DSP087-10	M477-0200-97	DDU4-8833-10	AYB-0200	D-88-10	082376-510
11	TTL1S300MX	14GC300	8487-11	DSP087-11	M477-0300-97	DDU4-8833-11	AYB-0300	D-88-11	082376-511
12	TTL1S400MX	14GC400	8487-12	DSP087-12	M477-0400-97	DDU4-8833-12	AYB-0400	D-88-12	082376-512
13	TTL1S500MX	14GC500	8487-13	DSP087-13	M477-0500-97	DDU4-8833-13	AYB-0500	D-88-13	082376-513
14	---	14SC14	8487-14	DSP087-14	M477-0020-96	DDU4-8833-14	AYC-0020	D-88-14	082376-514
15	---	14SC15	8487-15	DSP087-15	M477-0040-96	DDU4-8833-15	AYC-0040	D-88-15	082376-515
16		14SC16	8487-16	DSP087-16	M477-0050-96	DDU4-8833-16	AYC-0050	D-88-16	082376-516
17	---	14SC17	8487-17	DSP087-17	M477-0060-96	DDU4-8833-17	AYC-0060	D-88-17	082376-517
18	---	14SC18	8487-18	DSP087-18	M477-0080-96	DDU4-8833-18	AYC-0080	D-88-18	082376-518
19	---	14SC19	8487-19	DSP087-19	M477-0100-96	DDU4-8833-19	AYC-0100	D-88-19	082376-519
20	---	14SC20	8487-20	DSP087-20	M477-0150-96	DDU4-8833-20	AYC-0150	D-88-20	082376-520
21	---	14SC21	8487-21	DSP087-21	M477-0200-96	DDU4-8833-21	AYC-0200	D-88-21	082376-521
22	---	14SC22	8487-22	DSP087-22	M477-0300-96	DDU4-8833-22	AYC-0300	D-88-22	082376-522
23	---	14SC23	8487-23	DSP087-23	M477-0400-96	DDU4-8833-23	AYC-0400	D-88-23	082376-523
24	---	14SC24	8487-24	DSP087-24	M477-0500-96	DDU4-8833-24	AYC-0500	D-88-24	082376-524
25	---	14SC25	8487-25	DSP087-25	M477-0110-96	DDU4-8833-25	AYC-0110	D-88-25	082376-525
26	TTLDL025MX	14TC25	8487-26	DSP087-26	M477-0025-95	DDU4-8833-26	AZA-0025	D-88-26	082376-526

See footnote at end of table.

DESC drawing PIN 84087-	Similar vendor PIN 1/								
	CAGE 90095	CAGE 00222	CAGE 50965	CAGE 16714	CAGE 92912	CAGE 22519	CAGE 32155	CAGE 62694	CAGE 03947
27	TTLDL050MX	14TC50	8487-27	DSP087-27	M477-0050-95	DDU4-8833-27	AZA-005	D-88-27	082376-527
28	TTLDL075MX	14TC75	8487-28	DSP087-28	M477-0075-95	DDU4-8833-28	AZA-0075	D-88-28	082376-528
29	TTLDL100MX	14TC100	8487-29	DSP087-29	M477-0100-95	DDU4-8833-29	AZA-0100	D-88-29	082376-529
30	TTLDL125MX	14TC125	8487-30	DSP087-30	M477-0125-95	DDU4-8833-30	AZA-0125	D-88-30	082376-530
31	TTLDL150MX	14TC150	8487-31	DSP087-31	M477-0150-95	DDU4-8833-31	AZA-0150	D-88-31	082376-531
32	TTLDL200MX	14TC200	8487-32	DSP087-32	M477-0200-95	DDU4-8833-32	AZA-0200	D-88-32	082376-532
33	TTLDL250MX	14TC250	8487-33	DSP087-33	M477-0250-95	DDU4-8833-33	AZA-0250	D-88-33	082376-533
34	TTLDL300MX	14TC300	8487-34	DSP087-34	M477-0300-95	DDU4-8833-34	AZA-0300	D-88-34	082376-534
35	TTLDL400MX	14TC400	8487-35	DSP087-35	M477-0400-95	DDU4-8833-35	AZA-0400	D-88-35	082376-535
36	TTLDL500MX	14TC500	8487-36	DSP087-36	M477-0500-95	DDU4-8833-36	AZA-0500	D-88-36	082376-536
37	STTL1S010MX	14GC10S	8487-37	DSP087-37	M477-0010-94	DDU4-8833-37	---	D-88-37	082376-537
38	STTL1S020MX	14GC20S	8487-38	DSP087-38	M477-0020-94	DDU4-8833-38	---	D-88-38	082376-538
39	STTL1S030MX	14GC30S	8487-39	DSP087-39	M477-0030-94	DDU4-8833-39	---	D-88-39	082376-539
40	STTL1S040MX	14GC40S	8487-40	DSP087-40	M477-0040-94	DDU4-8833-40	---	D-88-40	082376-540
41	STTL1S050MX	14GC50S	8487-41	DSP087-41	M477-0050-94	DDU4-8833-41	---	D-88-41	082376-541
42	STTL1S060MX	14GC60S	8487-42	DSP087-42	M477-0060-94	DDU4-8833-42	---	D-88-42	082376-542
43	STTL1S080MX	14GC80S	8487-43	DSP087-43	M477-0080-94	DDU4-8833-43	---	D-88-43	082376-543
44	STTL1S100MX	14GC100S	8487-44	DSP087-44	M477-0100-94	DDU4-8833-44	AYD-0100	D-88-44	082376-544
45	STTL1S150MX	14GC150S	8487-45	DSP087-45	M477-0150-94	DDU4-8833-45	AYD-0150	D-88-45	082376-545
46	STTL1S200MX	14GC200S	8487-46	DSP087-46	M477-0200-94	DDU4-8833-46	AYD-0200	D-88-46	082376-546
47	STTL1S300MX	14GC300S	8487-47	DSP087-47	M477-0300-94	DDU4-8833-47	AYD-0300	D-88-47	082376-547
48	STTL1S400MX	14GC400S	8487-48	DSP087-48	M477-0400-94	DDU4-8833-48	AYD-0400	D-88-48	082376-548
49	STTL1S500MX	14GC500S	8487-49	DSP087-49	M477-0500-94	DDU4-8833-49	AYD-0500	D-88-49	082376-549
50	STTLDL020BMX	14SC26	8487-50	DSP087-50	M477-0020-93	DDU4-8833-50	---	D-88-50	082376-550
51	STTLDL040BMX	14SC27	8487-51	DSP087-51	M477-0040-93	DDU4-8833-51	---	D-88-51	082376-551
52	STTLDL050BMX	14SC28	8487-52	DSP087-52	M477-0050-93	DDU4-8833-52	---	D-88-52	082376-552

See footnote at end of table.

DESC drawing PIN 84087-	Similar vendor PIN 1/								
	CAGE 90095	CAGE 00222	CAGE 50965	CAGE 16714	CAGE 92912	CAGE 22519	CAGE 32155	CAGE 62694	CAGE 03947
53	STTLDL060BMX	14SC29	8487-53	DSP087-53	M477-0060-93	DDU4-8833-53	---	D-88-53	082376-553
54	STTLDL080BMX	14SC30	8487-54	DSP087-54	M477-0080-93	DDU4-8833-54	---	D-88-54	082376-554
55	STTLDL100BMX	14SC31	8487-55	DSP087-55	M477-0100-93	DDU4-8833-55	AYE-0100	D-88-55	082376-555
56	STTLDL150BMX	14SC32	8487-56	DSP087-56	M477-0150-93	DDU4-8833-56	AYE-0150	D-88-56	082376-556
57	STTLDL200BMX	14SC33	8487-57	DSP087-57	M477-0200-93	DDU4-8833-57	AYE-0200	D-88-57	082376-557
58	STTLDL300BMX	14SC34	8487-58	DSP087-58	M477-0300-93	DDU4-8833-58	AYE-0300	D-88-58	082376-558
59	STTLDL400BMX	14SC35	8487-59	DSP087-59	M477-0400-93	DDU4-8833-59	AYE-0400	D-88-59	082376-559
60	STTLDL500BMX	14SC36	8487-60	DSP087-60	M477-0500-93	DDU4-8833-60	AYE-0500	D-88-60	082376-560
61	STTLDL110BMX	14SC37	8487-61	DSP087-60	M477-0110-93	DDU4-8833-61	AYE-0110	D-88-61	082376-561
62	STTL1S600MX	14GC600S	8487-62	DSP087-60	M477-0600-92	DDU4-8833-62	AYE-0600	D-88-62	082376-562
63	STTL1S700MX	14GC700S	8487-63	DSP087-63	M477-0700-92	DDU4-8833-63	AYE-0700	D-88-63	082376-563
64	STTL1S800MX	14GC800S	8487-64	DSP087-64	M477-0800-92	DDU4-8833-64	AYE-0800	D-88-64	082376-564
65	STTL1S900MX	14GC900S	8487-65	DSP087-65	M477- 900-92	DDU4-8833-65	AYE-0900	D-88-65	082376-565
66	STTL1S999MX	4GC1000S	8487-66	DSP087-66	M477-1000-92	DDU4-8833-66	AYE-1000	D-88-66	082376-566
67	STTLDL025MX	14SC38	8487-67	DSP087-67	M477-0025-91	DDU4-8833-67	---	D-88-67	082376-567
68	STTLDL050MX	14SC39	8487-68	DSP087-68	M477-0050-91	DDU4-8833-68	---	D-88-68	082376-568
69	STTLDL075MX	14SC40	8487-69	DSP087-69	M477-0075-91	DDU4-8833-69	---	D-88-69	082376-569
70	STTLDL100MX	14SC41	8487-70	DSP087-70	M477-0100-91	DDU4-8833-70	---	D-88-70	082376-570
71	STTLDL125MX	14SC42	8487-71	DSP087-71	M477-0125-91	DDU4-8833-71	---	D-88-71	082376-571
72	STTLDL150MX	14SC43	8487-72	DSP087-72	M477-0150-91	DDU4-8833-72	---	D-88-72	082376-572
73	STTLDL200MX	14SC44	8487-73	DSP087-73	M477-0200-91	DDU4-8833-73	---	D-88-73	082376-573
74	STTLDL250MX	14SC45	8487-74	DSP087-74	M477-0250-91	DDU4-8833-74	---	D-88-74	082376-574
75	STTLDL500MX	14SC46	8487-75	DSP087-75	M477-0500-91	DDU4-8833-75	---	D-88-75	082376-575
76	STTL1S675MX	14SC47	8487-76	DSP087-76	M477-0675-90	DDU4-8833-76	---	D-88-76	082376-576
77	STTL1S725MX	14SC48	8487-77	DSP087-77	M477-0725-90	DDU4-8833-77	---	D-88-77	082376-577

1/ Do not use vendor PIN's for acquisition or marking purposes.

Vendor CAGE number	Vendor name and address
00222	ESC Electronics Corporation 534 Bergen Boulevard Palisades Park, NJ 07650 Phone: (201) 947-0400
03947	Anderson Laboratories, Incorporated 45 Old Iron Ore Road Bloomfield, CT 06002 Phone: (203) 286-9090
16714	Rhombus Industries, Incorporated 15801 Chemical Lane Huntington Beach, CA 92649 Phone: (714) 898-0960
22519	Data Delay Devices, Incorporated 3 Mount Prospect Avenue Clifton, NJ 07013 Phone: (201) 773-2299
32155	Polara Engineering 4115 W. Artesia Avenue Fullerton, CA 92633 Phone: (714) 521-0900
50965	Princeton Advanced Components, Incorporated 860 State Road Princeton, NJ 08540 Phone: (609) 924-2444
62694	JBM Electronics, Incorporated 1 Commerce Drive Bedford, NH 03110 Phone: (603) 623-0222
90095	Technitrol Incorporated 1952 E. Allegheny Avenue Philadelphia, PA 19134-3122 Phone: (215) 426-9105
92912	Bel Fuse, Incorporated 198 Van Vorst Street Jersey City, NJ 07302 Phone: (201) 432-0463