REVISIONS

LT	DESCRIPTION	DATE	APPROVED
A	Pages 6 and 9, added dash number 45.	6 Jan 1986	Ivan R. Jones
B	Deleted references to MIL-D-23859 and replaced with references to MIL-D-83531. Modified electrical characteristics and changed figure 1. Updated vendor table.	11 Aug 1987	Randy Larson
C	Added dash numbers 46 through 62. Added an additional source of supply. Editorial changes throughout.	21 Dec 1987	Randy Larson
D	Added paragraph 3.14. Changed 3.2.2 and note 7 on figure 1. Changed PIN's for vendor 16714. Deleted vendor 00213. Editorial changes throughout.	11 Jan 1993	David Moore
E	Changes in accordance with NOR 5999-R-001-93.	3 Mar 1993	David Moore
F	Incorporated boilerplate update. Added new source of supply. Editorial changes throughout.	19 Jul 2000	Kendall A. Cottongim

PREVIOUS CAGE CODE 14933 SUPERSEDED BY 037Z3.

THE ORIGINAL FIRST PAGE OF THIS DRAWING HAS BEEN REPLACED.

Prepared in accordance with MIL-STD-100 Selected item drawing

REV																						
PAGE																						
REV																						
PAGE																						
REV STATUS OF PAGES	**REV**			F	F	F	F	F	F	F	F											
	PAGES			1	2	3	4	5	6	7	8											

PMIC N/A	**PREPARED BY** Chris Rauch	**DEFENSE SUPPLY CENTER, COLUMBUS** **COLUMBUS, OH**
Original date of drawing 14 June 1985	**CHECKED BY** Randy Larson	**TITLE** **DELAY LINES, PASSIVE, 20 TAP, 24 PIN, DIP**
	APPROVED BY Ivan R. Jones	
	SIZE A / **CODE IDENT. NO.** 14933	**DWG NO.** **85012**
	REV F	**PAGE** 1 **OF** 8

AMSC N/A 5999-E173

DISTRIBUTION STATEMENT A. Approved for public release; distribution is unlimited.

1. SCOPE

1.1 Scope. This drawing describes the requirements for a family of passive delay lines with 24 pins and 20 taps.

1.2 Part or Identifying Number (PIN). The complete PIN shall be as follows:

85012	-01
Drawing number	Dash number (see table I)

2. APPLICABLE DOCUMENTS

2.1 Government documents.

2.1.1 Specifications, standards, and handbooks. The following specifications, standards, and handbooks form a part of this document to the extent specified herein. Unless otherwise specified, the issues of these documents are those listed in the issue of the Department of Defense Index of Specifications and Standards (DoDISS) and supplement thereto, cited in the solicitation (see 6.2).

SPECIFICATIONS

DEPARTMENT OF DEFENSE

MIL-PRF-83531 - Delay Lines, Passive, General Specification for.

MIL-PRF-55681 - Capacitor, Chip, Multiple Layer, Fixed, Ceramic Dielectric, Established Reliability and Non-Established Reliability, General Specification for.

STANDARDS

DEPARTMENT OF DEFENSE

MIL-STD-202 - Test Methods for Electronic and Electrical Component Parts.

MIL-STD-1285 - Marking of Electrical and Electronic Parts.

MIL-STD-1276 - Leads for Electronic Component Parts.

(Unless otherwise indicated, copies of federal and military specifications, standards, and handbooks are available from the Document Automation and Production Service, Building 4D (DPM-DODSSP), 700 Robins Avenue, Philadelphia, PA 19111-5094.)

2.2 Order of precedence. In the event of a conflict between the text of this document and the references cited herein, the text of this document takes precedence. Nothing in this document, however, supersedes applicable laws and regulations unless a specific exemption has been obtained.

3. REQUIREMENTS

3.1 Materials. Materials shall be as specified in MIL-PRF-83531.

3.1.1 Cases. Cases shall be molded epoxy and shall be in accordance with MIL-PRF-83531.

3.1.2 Terminals. Terminal material and finish shall be as specified in MIL-PRF-83531.

3.1.3 Solder and soldering flux. Solder and soldering flux shall be in accordance with MIL-PRF-83531.

3.2 Interface and physical dimensions. See figure 1.

3.3 Total delay time. See table I.

3.4 Nominal terminating impedance. See table I.

3.5 Maximum attenuation. See table I.

3.6 DC resistance. (RDC): $RDC = \text{impedance} \times \frac{\text{attenuation}}{1 - \text{attenuation}}$

EXAMPLE: $RDC = 50 \times \frac{0.03}{1 - 0.03} = 1.5 \text{ ohms}$

3.7 Rise time. Rise time shall be 15 percent of total delay time (maximum).

3.8 Operating temperature. Operating temperature shall be –55°C to +125°C.

3.9 Delay accuracy. Delay accuracy shall be ±5 percent.

3.10 Temperature coefficient of delay. Temperature coefficient of delay shall be 100 ppm/°C maximum.

3.11 Tap accuracy. Tap accuracy shall be ± 2 ns or ± 5 percent, whichever is greater.

3.12 Marking. Delay lines shall be marked on top of the case in accordance with method I of MIL-STD-1285, except the (part name) shall be marked with the PIN as specified herein (see 1.2), the manufacturer's name or Commercial and Government Entity (CAGE) code, date lot codes, and an index mark next to Pin 1 (see figure 1).

3.13 Recycled, recovered, or environmentally preferable materials. Recycled, recovered, or environmentally preferable materials should be used to the maximum extent possible provided that the material meets or exceeds the operational and maintenance requirements, and promotes economically advantageous life cycle costs.

3.14 Certificate of compliance. A certificate of compliance shall be required from manufacturers requesting to be a suggested source of supply.

3.15 Workmanship. The delay line shall be uniform in quality and free from any defects that will affect life, serviceability, or appearance.

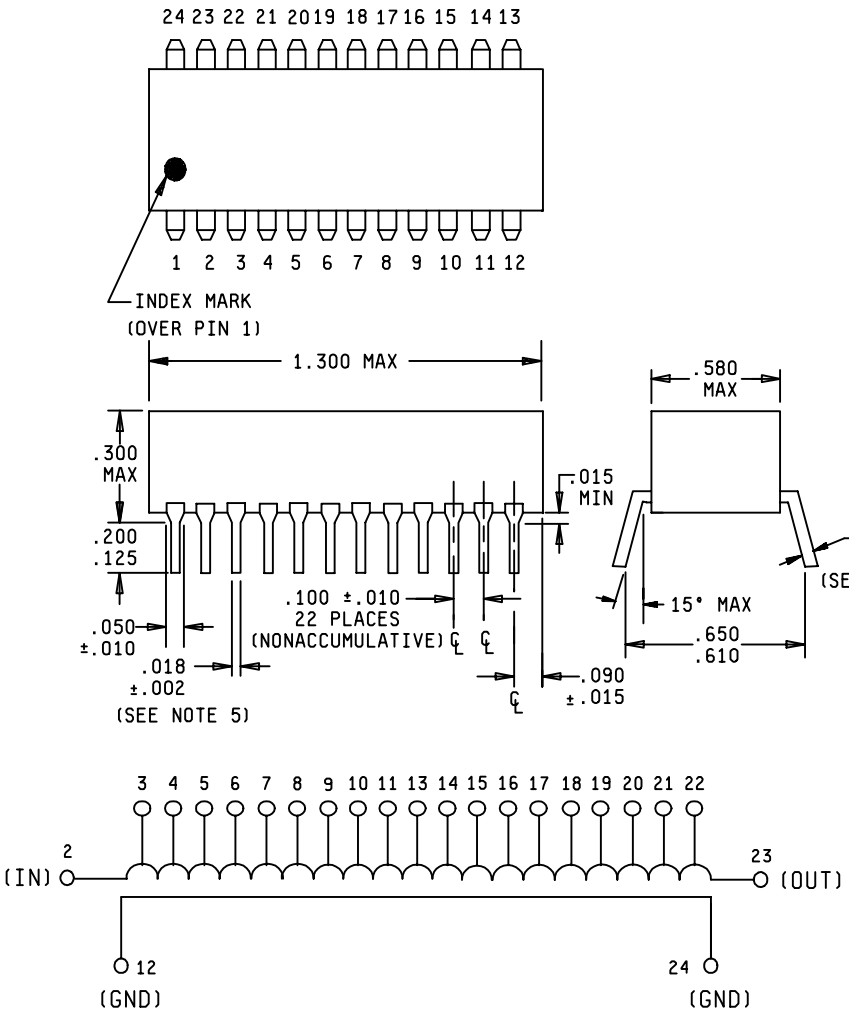

Inches	mm
.002	0.05
.010	0.25
.015	0.38
.018	0.46
.050	1.27
.090	2.29
.100	2.54
.125	3.18
.200	5.08
.300	7.52
.580	14.73
.610	15.49
.650	16.51
1.300	33.02

NOTES:

1. Dimensions are in inches.
2. Metric equivalents are given for general information only.
3. Standoff shape and location are optional. Height shall be as indicated.
4. Pin 1 is not connected, and may be omitted at the manufacturer's option.
5. Terminal dimensions are prior to hot solder dip.
6. Schematic depicts general characteristics and is not intended to limit specific manufacturing designs.
7. Leads shall be free of case meniscus and other foreign material and shall be solderable for a minimum of .010 inch (0.25 mm) above the seating plane of the delay line.

FIGURE 1. Interface and physical dimensions.

PIN 85012-	Total delay time (ns) 1/	Nominal terminating impedance (Ω)	Maximum attenuation (percent)
01	50	50	6
02	60	50	7
03	80	50	9
04	100	50	11
05	150	50	11
06	200	50	12
07	50	100	6
08	60	100	6
09	80	100	6
10	100	100	7
11	150	100	7
12	200	100	8
13	300	100	10
14	400	100	11
15	40	200	3
16	80	200	4
17	120	200	5
18	200	200	6
19	300	200	6
20	400	200	7
21	500	200	8
22	600	200	10
23	800	200	16
24	50	250	3
25	100	250	4
26	150	250	5
27	200	250	8
28	250	250	8
29	300	250	8
30	400	250	9
31	500	250	11

PIN 85012-	Total delay time (ns) 1/	Nominal terminating impedance (Ω)	Maximum attenuation (percent)
32	600	250	13
33	800	250	14
34	1000	250	16
35	200	500	4
36	300	500	7
37	400	500	7
38	500	500	8
39	600	500	9
40	800	500	14
41	1000	500	17
42	1200	500	18
43	1500	500	21
44	2000	500	24
45	500	100	12
46	20	50	11
47	40	50	11
48	20	100	11
49	40	100	11
50	500	100	11
51	600	100	11
52	800	100	11
53	1000	100	11
54	1200	100	11
55	1500	100	11
56	60	200	11
57	100	200	11
58	1000	200	11
59	1200	200	11
60	1500	200	11
61	2000	200	11
62	2500	500	11

1/ Delay between successive taps shall be 1/20 of the total delay time.

TABLE I. PIN's and electrical characteristics.

4. VERIFICATION

4.1 Conformance inspection.

4.1.1 Inspection of product for delivery. Inspection of product for delivery shall consist of the group A inspection in MIL-PRF-83531. Individual tests shall be performed in the order listed therein.

4.1.2 Certification. The acquiring activity, at its discretion, may accept a statement of compliance with the group A requirements in lieu of the manufacturer performing the group A tests (see 6.2c).

5. PACKAGING

5.1 Packaging requirements. For acquisition purposes, the packaging requirements shall be as specified in the contract or order (see 6.2). When packaging of material is to be performed by DoD personnel see MIL-PRF-83531.

6. NOTES

(This section contains information of a general or explanatory nature that may be helpful, but is not mandatory.)

6.1 Intended use. Delay lines conforming to this drawing are intended for use when military specifications do not exist and qualified military devices that will perform the required function are not available for the OEM application.

6.2 Ordering data. The contract or purchase order should specify the following:

a. Complete PIN (see 1.2).

b. Requirements for delivery, and one copy of the conformance inspection data or the certificate of compliance that parts have passed conformance inspection with each shipment of parts by the manufacturer.

c. Whether the manufacturer performs the group A inspection tests or provides a statement of compliance with group A requirements.

d. Requirement for the manufacturer to notify the acquiring activity in the event of a change in product.

e. Requirements for packaging and packing.

6.3 Users of record. Coordination of this document for future revisions are coordinated only with the suggested sources of supply and the users of record of this document. Requests to be added as a recorded user of this drawing should be in writing to: Defense Supply Center, Columbus, ATTN: DSCC-VAT, Post Office Box 3990, Columbus, OH 43216-5000 or by telephone (614) 692-0554 or DSN 850-0554.

6.4 Suggested sources of supply. Suggested sources of supply are listed herein. Additional sources will be added as they become available. For assistance in the use of this drawing, contact Defense Supply Center, Columbus, ATTN: DSCC-VAT, Post Office Box 3990, Columbus, OH 43216-5000 or by telephone (614) 692-0554 or DSN 850-0554.

Vendor CAGE	Vendor name and address
03947	Andersen Laboratories, Inc 45 Old Iron Ore Road Bloomfield, CT 06002-1422 (203) 286-9090
22519	Data Delay Devices, Inc 3 Mount Prospect Avenue Clifton, NJ 07013-1915 (973) 773-2299
00222	ESC Electronics Corporation 901 Motor Parkway Hauppauge, NY 11788-5247 (631) 582-2080
62964	JBM Electronics, Inc 150 Dow Street Manchester, NH 03101-1227 (603) 623-0222

Vendor CAGE	Vendor name and address
20933	Kappa Technologies, Inc 1447 Pinewood Street Rahway, NJ 07065-5503 (732) 396-9400
50965	Princeton Advanced Components, Inc 860 State Road Princeton, NJ 08540-1416 (609) 924-2444
16714	Rhombus Industries, Inc 15801 Chemical Lane Huntington Beach, CA 92649-1510 (714) 898-0960

DSCC DWG PIN 85012-	Vendor similar designation or type number 1/						
	CAGE 16714	CAGE 00222	CAGE 62694	CAGE 50965	CAGE 22519	CAGE 20933	CAGE 03947
01	SP012-01	24G50	L-23-801	8012-01	2214-8496-1	DP24MC50051	083851-501
02	SP012-02	24G60	L-23-802	8012-02	2214-8496-2	DP24MC60051	083851-502
03	SP012-03	24G80	L-23-803	8012-03	2214-8496-3	DP24MC80051	083851-503
04	SP012-04	24G100	L-23-804	8012-04	2214-8496-4	DP24MC10151	083851-504
05	SP012-05	24G150	L-23-805	8012-05	2214-8496-5	DP24MC15151	083851-505
06	SP012-06	24G200	L-23-806	8012-06	2214-8496-6	DP24MC20151	083851-506
07	SP012-07	24A50	L-23-807	8012-07	2214-8496-7	DP24MC50012	083851-507
08	SP012-08	24A60	L-23-808	8012-08	2214-8496-8	DP24MC60012	083851-508
09	SP012-09	24A80	L-23-809	8012-09	2214-8496-9	DP24MC80012	083851-509
10	SP012-10	24A100	L-23-810	8012-10	2214-8496-10	DP24MC10112	083851-510
11	SP012-11	24A150	L-23-811	8012-11	2214-8496-11	DP24MC15112	083851-511
12	SP012-12	24A200	L-23-812	8012-12	2214-8496-12	DP24MC20112	083851-512
13	SP012-13	24A300	L-23-813	8012-13	2214-8496-13	DP24MC30112	083851-513
14	SP012-14	24A400	L-23-814	8012-14	2214-8496-14	DP24MC40112	083851-514
15	SP012-15	24B40	L-23-815	8012-15	2214-8496-15	DP24MC40022	083851-515
16	SP012-16	24B80	L-23-816	8012-16	2214-8496-16	DP24MC80022	083851-516
17	SP012-17	24B120	L-23-817	8012-17	2214-8496-17	DP24MC12122	083851-517
18	SP012-18	24B200	L-23-818	8012-18	2214-8496-18	DP24MC20122	083851-518
19	SP012-19	24B300	L-23-819	8012-19	2214-8496-19	DP24MC30122	083851-519
20	SP012-20	24B400	L-23-820	8012-20	2214-8496-20	DP24MC40122	083851-520
21	SP012-21	24B500	L-23-821	8012-21	2214-8496-21	DP24MC50122	083851-521
22	SP012-22	24B600	L-23-822	8012-22	2214-8496-22	DP24MC60122	083851-522
23	SP012-23	24B800	L-23-823	8012-23	2214-8496-23	DP24MC80122	083851-523
24	SP012-24	24H50	L-23-824	8012-24	2214-8496-24	DP24MC50025	083851-524
25	SP012-25	24H100	L-23-825	8012-25	2214-8496-25	DP24MC10125	083851-525
26	SP012-26	24H150	L-23-826	8012-26	2214-8496-26	DP24MC15125	083851-526
27	SP012-27	24H200	L-23-827	8012-27	2214-8496-27	DP24MC20125	083851-527
28	SP012-28	24H250	L-23-828	8012-28	2214-8496-28	DP24MC25125	083851-528
29	SP012-29	24H300	L-23-829	8012-29	2214-8496-29	DP24MC30125	083851-529
30	SP012-30	24H400	L-23-830	8012-30	2214-8496-30	DP24MC40125	083851-530
31	SP012-31	24H500	L-23-831	8012-31	2214-8496-31	DP24MC50125	083851-531
32	SP012-32	24H600	L-23-832	8012-32	2214-8496-32	DP24MC60125	083851-532
33	SP012-33	24H800	L-23-833	8012-33	2214-8496-33	DP24MC80125	083851-533
34	SP012-34	24H1000	L-23-834	8012-34	2214-8496-34	DP24MC10225	083851-534
35	SP012-35	24C200	L-23-835	8012-35	2214-8496-35	DP24MC20152	083851-535
36	SP012-36	24C300	L-23-836	8012-36	2214-8496-36	DP24MC30152	083851-536
37	SP012-37	24C400	L-23-837	8012-37	2214-8496-37	DP24MC40152	083851-537
38	SP012-38	24C500	L-23-838	8012-38	2214-8496-38	DP24MC50152	083851-538
39	SP012-39	24C600	L-23-839	8012-39	2214-8496-39	DP24MC60152	083851-539
40	SP012-40	24C800	L-23-840	8012-40	2214-8496-40	DP24MC80152	083851-540
41	SP012-41	24C1000	L-23-841	8012-41	2214-8496-41	DP24MC10252	083851-541
42	SP012-42	24C1200	L-23-842	8012-42	2214-8496-42	DP24MC12252	083851-542
43	SP012-43	24C1500	L-23-843	8012-43	2214-8496-43	DP24MC15252	083851-543
44	SP012-44	24C2000	L-23-844	8012-44	2214-8496-44	DP24MC20252	083851-544
45	SP012-45	24A500	L-23-845	8012-45	2214-8496-45	DP24MC50112	083851-545

See footnote at end of table

DSCC DWG PIN 85012-	Vendor similar designation or type number 1/						
	CAGE 16714	CAGE 00222	CAGE 62694	CAGE 50965	CAGE 22519	CAGE 20933	CAGE 03947
46	SP012-46	24G20	L-23-846	8012-46	2214-8496-46	DP24MC20051	083851-546
47	SP012-47	24G40	L-23-847	8012-47	2214-8496-47	DP24MC40051	083851-547
48	SP012-48	24A20	L-23-848	8012-48	2214-8496-48	DP24MC20012	083851-548
49	SP012-49	24A40	L-23-849	8012-49	2214-8496-49	DP24MC40012	083851-549
50	SP012-50	24A500	L-23-850	8012-50	2214-8496-50	DP24MC50112	083851-550
51	SP012-51	24A600	L-23-851	8012-51	2214-8496-51	DP24MC60112	083851-551
52	SP012-52	24A800	L-23-852	8012-52	2214-8496-52	DP24MC80112	083851-552
53	SP012-53	24A1000	L-23-853	8012-53	2214-8496-53	DP24MC10212	083851-553
54	SP012-54	24A1200	L-23-854	8012-54	2214-8496-54	DP24MC12212	083851-554
55	SP012-55	24A1500	L-23-855	8012-55	2214-8496-55	DP24MC15212	083851-555
56	SP012-56	24B60	L-23-856	8012-56	2214-8496-56	DP24MC60022	083851-556
57	SP012-57	24B100	L-23-857	8012-57	2214-8496-57	DP24MC10122	083851-557
58	SP012-58	24B1000	L-23-858	8012-58	2214-8496-58	DP24MC10222	083851-558
59	SP012-59	24B1200	L-23-859	8012-59	2214-8496-59	DP24MC12222	083851-559
60	SP012-60	24B1500	L-23-860	8012-60	2214-8496-60	DP24MC15222	083851-560
61	SP012-61	24B2000	L-23-861	8012-61	2214-8496-61	DP24MC20222	083851-561
62	SP012-62	24C2500	L-23-862	8012-62	2214-8496-62	DP24MC25252	083851-562

1/ CAUTION: Do not use these numbers for item acquisition. Items acquired to these numbers may not satisfy the performance requirements of this drawing.